Woodsmith

12 Easy-to-Build Shop Projects

# Shop Projects & Storage Ideas™

## Cabinets, Chests, Totes & More

## First Rate Storage

- Craftsman Wall Cabinet
- Campaign-Style Tool Cabinet
- Heirloom Tool Chest

# Shop Projects & Storage Ideas

**EXECUTIVE EDITOR** Phil Huber
**ASSISTANT EDITOR** Rob Petrie

**EXECUTIVE ART DIRECTOR** Todd Lambirth
**SENIOR GRAPHIC DESIGNERS** Becky Kralicek

**CREATIVE DIRECTOR** Chris Fitch
**PROJECT DESIGN EDITOR** Dillon Baker
**PROJECT DESIGNER/BUILDER** John Doyle
**SHOP MANAGER** Marc Hopkins
**CONTRIBUTING PHOTOGRAPHER** Chris Hennessey

**ADVERTISING DIRECTOR** Jack Christiansen
847-724-5633
jchristiansen@aimmedia.com
**AD PRODUCTION COORDINATOR** Julie Dillon
**GRAPHIC DESIGNER** Gabriela Crespo

HOME GROUP
ACTIVE INTEREST MEDIA

Shop Projects & Storage Ideas is published by the Home Group of Active Interest Media Holdco, Inc., 2143 Grand Ave., Des Moines, IA 50312. Canada Post Agreement 40038201. Canada BN 84597 5473 RT. ©Copyright 2025 Active Interest Media Holdco Inc.

An Active Interest Media Company.

All rights reserved. No part of this book may be reproduced in any form or by any electronic or mechanical means, including information storage and retrieval devices or systems, without prior written permission from the publisher, except that brief passages may be quoted for reviews.

Woodsmith® and ShopNotes® are registered trademarks of Cruz Bay Publishing, Inc.

For subscription information about Woodsmith, visit us online at:
Woodsmith.com or call (800) 333-5075

A Supplement to Active Interest Media Publications
2143 Grand Ave., Des Moines, IA 50312
Printed in U.S.A.

ACTIVE INTEREST MEDIA

**CHAIRMAN & CEO** Andrew W. Clurman
**CHAIRMAN EMERITUS** Efrem Zimbalist III
**CHIEF OPERATING OFFICER** Brian Van Heuverswyn
**CHIEF FINANCIAL OFFICER** Adam Smith
**SENIOR VP, MARKETING** Erica Moynihan
**VP, MARKETING** Amanda Phillips
**VP, CIRCULATION** Paige Nordmeyer
**VP, SALES OPERATIONS** Christine Nilsen
**VP, DIGITAL PRODUCT DEVELOPMENT** Ashley MacDonald
**VP, STRATEGY & RESEARCH** Kristina Swindell
**DIRECTOR, HUMAN RESOURCES** Scott Roeder
**DIRECTOR, PRODUCTION** Phil Graham
**DIRECTOR, RETAIL SALES** Susan A. Rose
**DIRECTOR, INFORMATION TECHNOLOGY** Andrew Shattuck

## SHOP SAFETY IS YOUR RESPONSIBILITY

Using hand or power tools improperly can result in serious injury or death. Do not operate any tool until you read the manual and understand how to operate the tool safely. Always use all appropriate safety equipment as well as the guards that come with your tools and equipment, and read the manuals that accompany them. In some of the illustrations in this book, the guards and safety equipment have been removed only to provide a better view of the operation. Do not attempt any procedure without using all appropriate safety equipment or without ensuring that all guards are in place. Active Interest Media Holdco. assumes no responsibility for any injury, damage, or loss suffered as a result of your use of the material, plans, or illustrations contained in this book.

contents

# Grand Cabinets

**Campaign-Style Cabinet 6**
Store your tools in style. This cabinet is based on 19th-century campaign chests and features loads of storage options.

**Classic Oak Cabinet 14**
With quartersawn oak, simple joinery, fine details, and lots of storage, what more could you ask for?

**Shaker Shop Hutch 24**
Plenty of drawers and compartments keep tools protected and within reach — your tools never had it so good.

**Fold-Down Router Cabinet 34**
Short on space? The small footprint of this router table means it will fit almost any size of shop.

# Best Chests

**High-Tech Tool Chest 42**
Learn how to rivet aluminum angle and lightweight plywood into a strong and sturdy chest for your tools.

**Traditional Tool Chest 50**
Through dovetails, authentic hardware, and storage combine to make a classic home for your prized hand tools.

**Heirloom Tool Chest 60**
This high-style chest stores and organizes your hand tools. And it's made from low-cost materials and simple joinery.

# Wall-Mounted Storage

**Pegboard Storage System 70**
Basic construction and low-cost materials are the key to this clever (and handy) wall-mounted storage system.

**Craftsman Wall Cabinet 76**
Glass-pane doors protect your prized tools from dust, and the Arts & Crafts details improves your shop's style.

**Cabinetmaker's Saw Till 84**
Shop projects are practical, but that doesn't mean they can't show off. This traditional till gives you the best of both.

**Tambour Tool Cabinet 90**
Your best hand tools deserve a home that's equally special. A tambour door really makes this cabinet stand out.

# Grand Cabinets

In this first section you'll find for four cabinets that are as visually appealing as they are functional. No matter which one you choose to make, these are guaranteed to revitalize your shop and optimize your work.


CAMPAIGN-STYLE CABINET .....6

CLASSIC OAK CABINET.....14

SHAKER SHOP HUTCH .....24

FOLD-DOWN ROUTER CABINET .....34

# Campaign-Style Tool Cabinet

Modular design and straightforward plywood construction make building this furniture-quality tool cabinet surprisingly quick.

There's just something special about having a nice place to store your tools — like this impressive cabinet. In addition to keeping your most-used tools organized and within easy reach, it makes the time you spend in your shop more enjoyable.

This cabinet is based on 19th-century campaign furniture. These rugged, modular cases could be moved easily by military officers. While you probably aren't on the move, no doubt your shop could use this kind of efficient storage.

# Construction Details

## OVERALL DIMENSIONS:
## 36" W x 64" H x 18" D

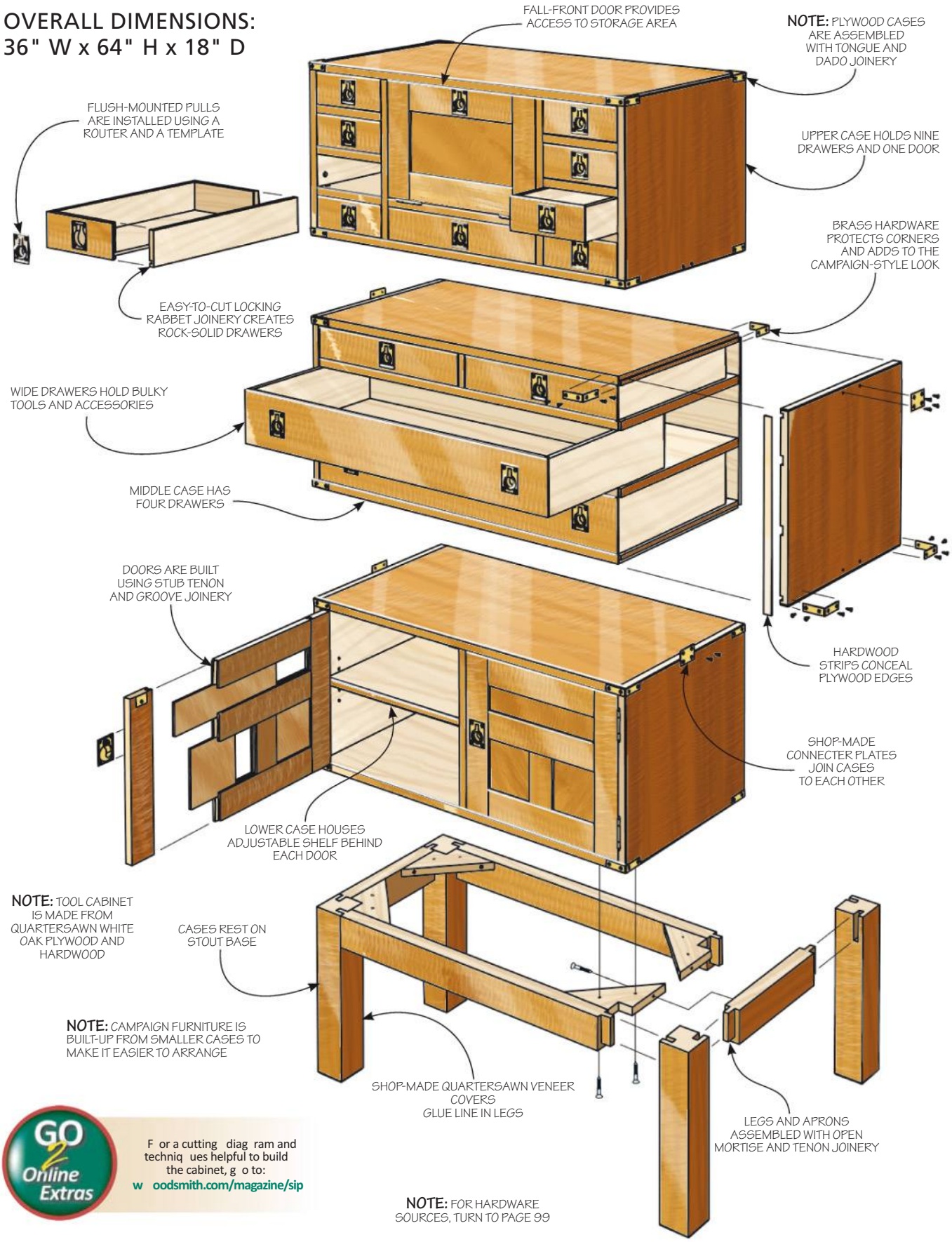


GO 2 Online Extras

F or a cutting diag ram and techniq ues helpful to build the cabinet, g o to:
w oodsmith.com/magazine/sip

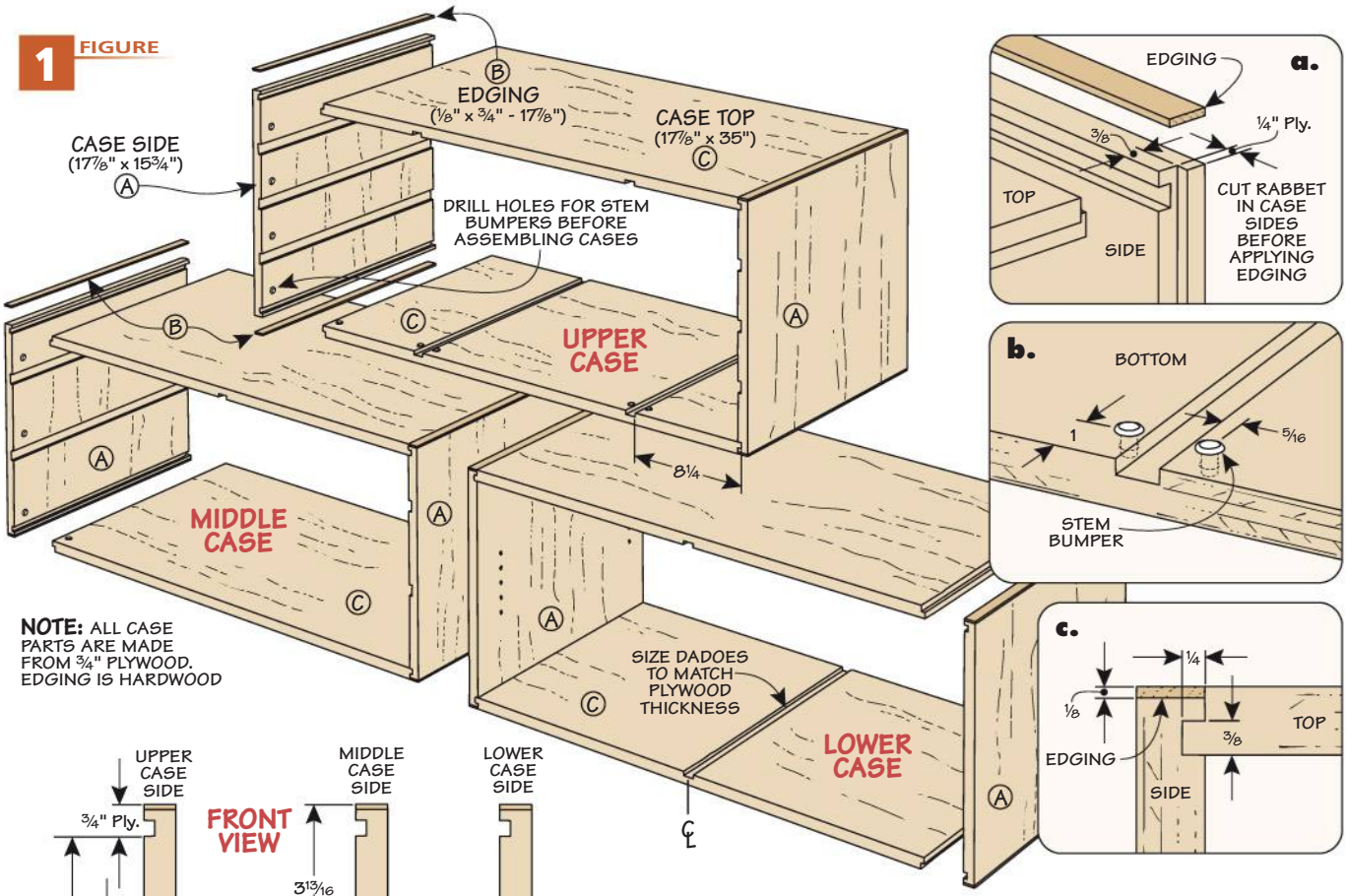


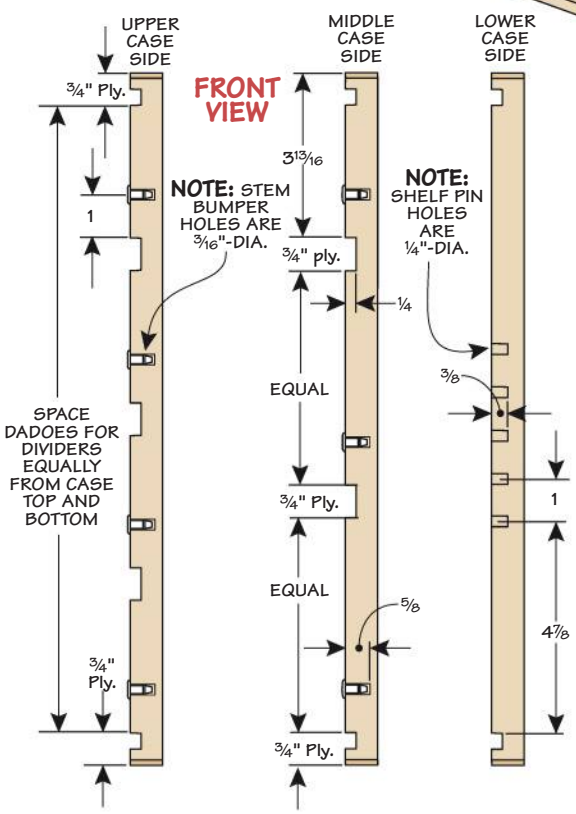


# Making the Cases

The three plywood cases are the place to begin. Even with all the dividers, building and assembling the cases is not at all difficult. The joinery is bread-and-butter dadoes and rabbets. However, I want to highlight a few points that will help you get the best results.

For starters, don't think you need to try and glue up all the parts of each case at once. Instead, take it one step at a time. In a nutshell, I build the outside of the case first. Then I cut and install the smaller interior dividers.

Each case is built separately, but they should still match when stacked together. To make sure that happens, cut the sides, tops, and bottoms for the three main cases at the same time. This ensures that the cases will be the same size when assembled.

Another element in meeting this goal has to do with matching the grain along the case sides. I cut the case sides sequentially from the sheet of plywood, so the grain runs continuously up each side of the stacked cases.

**RABBETS & EDGING.** There are two other steps to take before cutting the corner joinery. The first of these is to cut a rabbet along the back edge of all the case parts, as in Figure 1a. It's sized to hold a 1/4" plywood back panel.

The other item is applying thin hardwood edging to the top and bottom of the side panels, as you can see in Figure 1c. This covers the exposed plies and makes it easier to cut the corner joints so the pieces end up perfectly flush.

**CASE JOINERY.** The outer case parts are assembled with tongue and dado joints. The joinery is formed by cutting a narrow dado in the case sides. The case top and bottom have a tongue cut on each end to fit snugly into the dado. Here again, look at Figure 1c for all the dimensions.

**ADD THE DIVIDERS.** The various horizontal and vertical dividers shown in Figures 2 and 3 fit in dadoes that match the thickness of the plywood. For a good fit, I took some extra time to fine-tune my dado setup by making a cut and testing the fit with the plywood. Add or remove shims until you get a joint with a smooth, sliding fit with no slop.

**2** FIGURE

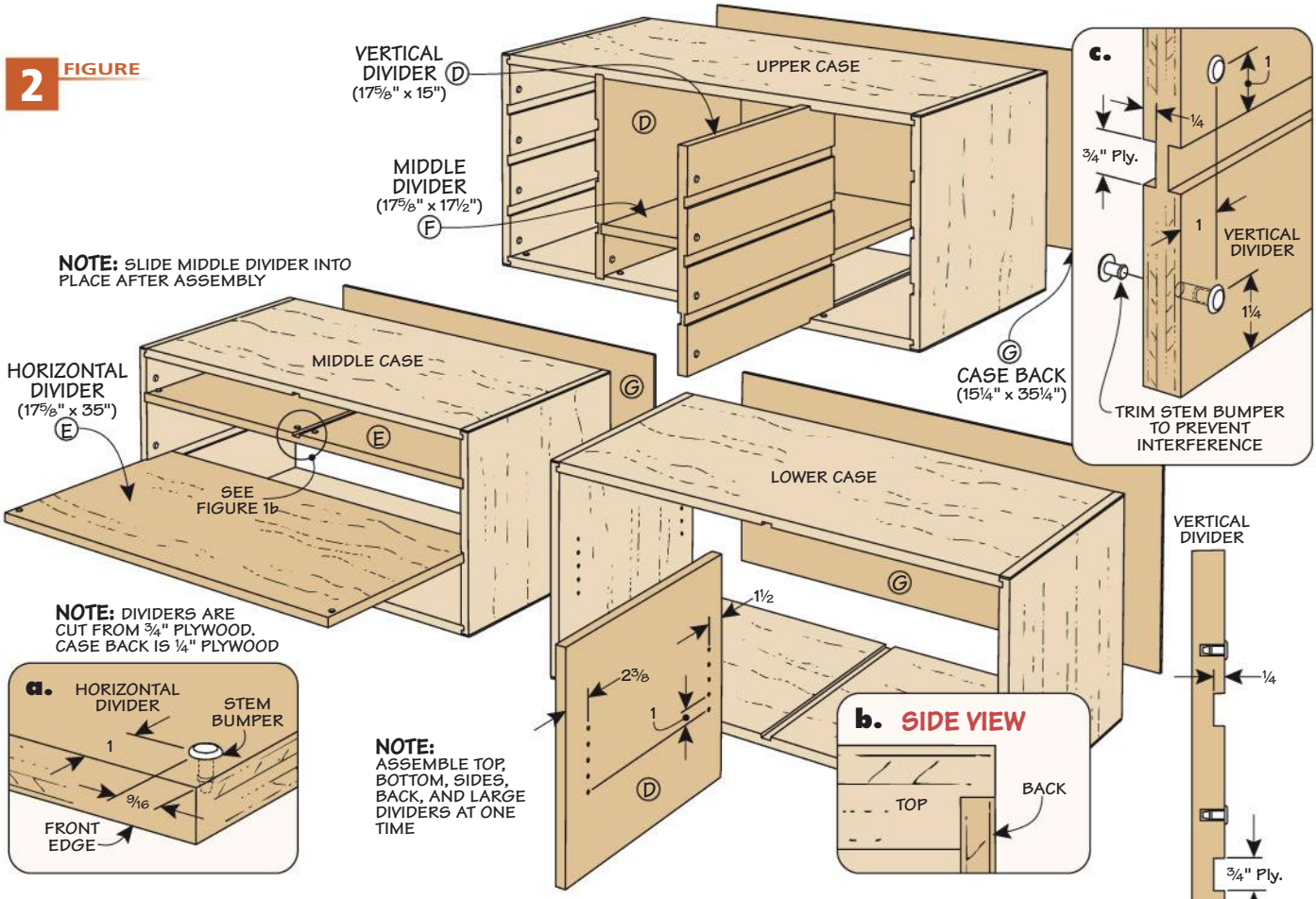


It's a good idea to note the combination of chippers and shims you use since you'll need to come back to it later on.

The front view drawings on the opposite page show the locations for dadoes in the sides. Figure 1 shows the other dado locations.

**LARGE DIVIDERS.** I clamped the top, bottom, and sides together (without glue) to determine the size of the largest dividers: The vertical dividers for the upper and lower cases and the horizontal dividers in the middle case, as shown in Figure 2.

Before gluing these parts together, you still need to cut the dadoes in the dividers. They need to line up perfectly with the opposing dadoes. To find out how to do this, refer to the article online at *Woodsmith.com/magazine/sip*.

I also installed stem bumpers that support the drawers (Figures 1b, 2a and 2c). At this point, you can glue up the case pieces and add the backs.

**SMALLER DIVIDERS.** Cut the smaller dividers to fit the openings after gluing the cases together, as shown in Figure 3 below. Size them for a smooth, sliding fit in the dadoes. Apply a small amount of glue to the beginning of the dado. Sliding the divider into place then spreads the glue along the length of the joint.

**3** FIGURE

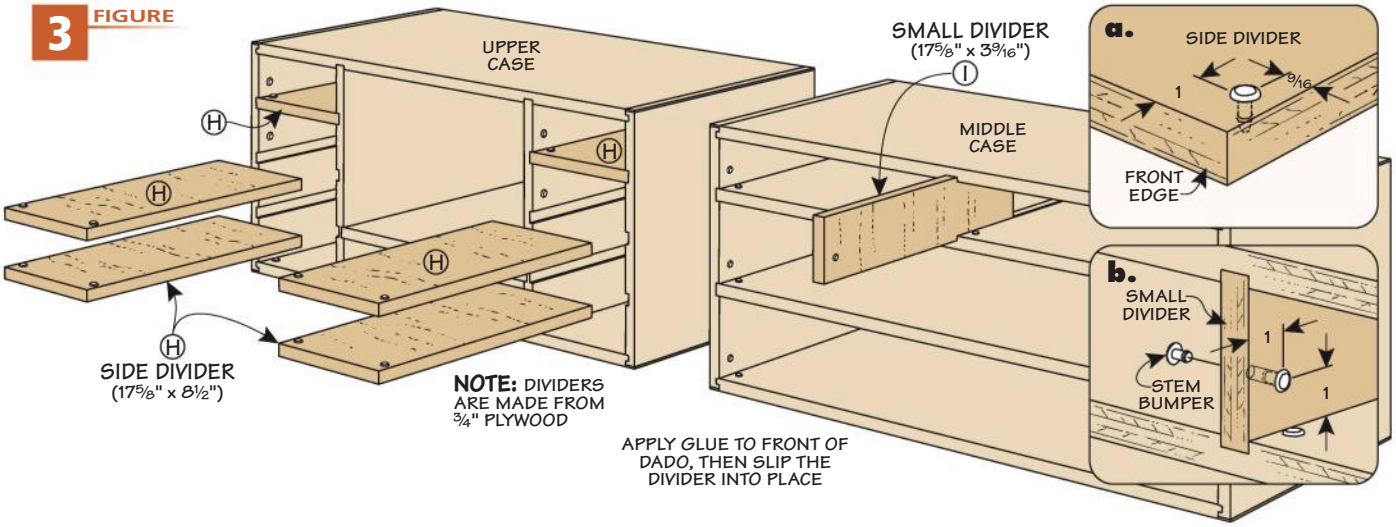

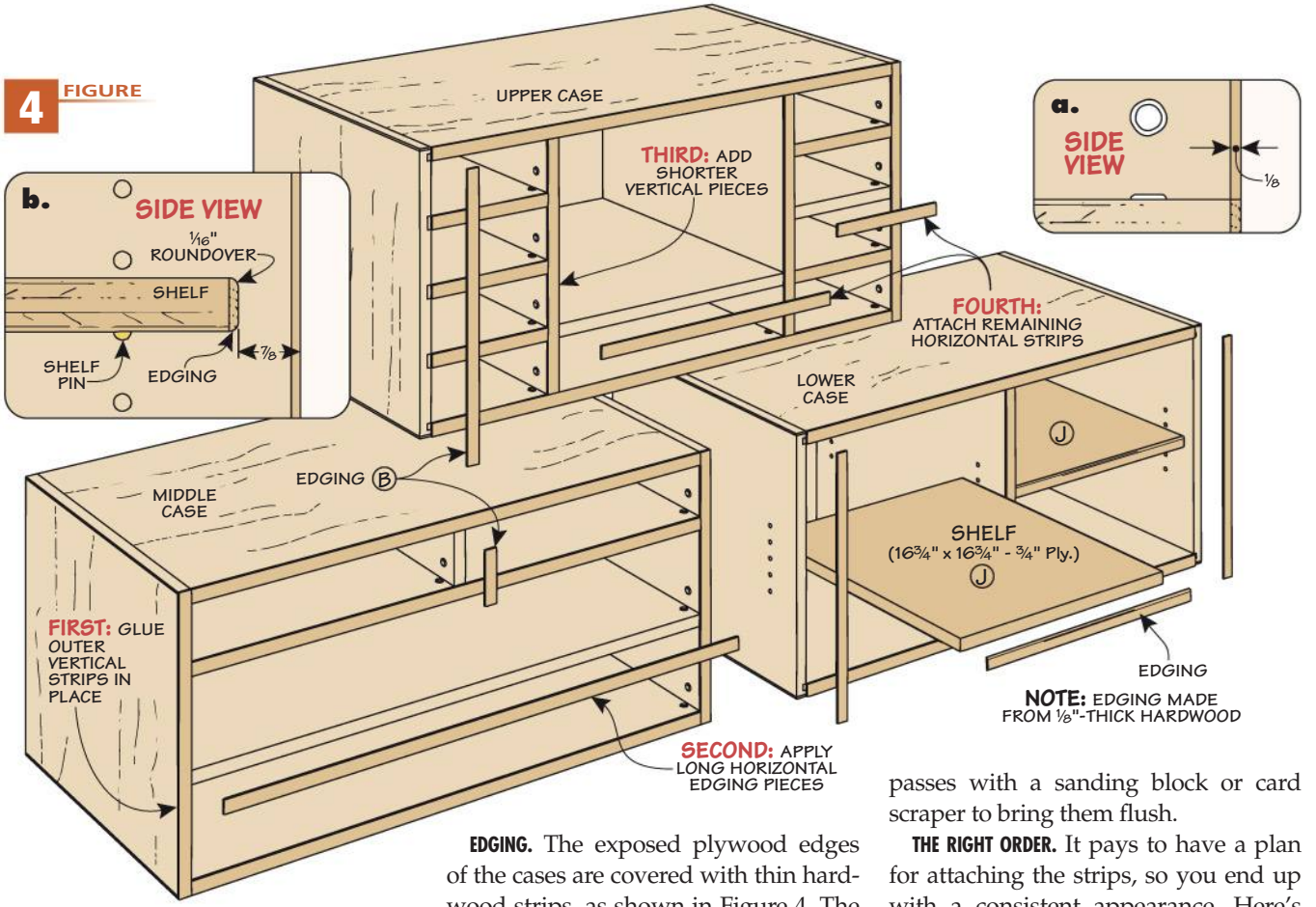


# Add Trim, Doors & Hardware

The heavy work involved in building the cabinets is behind you. The main task you have ahead is taking advantage of all the space inside the cases. But, before you get to that, there's some trim work to complete.

**EDGING.** The exposed plywood edges of the cases are covered with thin hardwood strips, as shown in Figure 4. The trick is in sizing and applying the strips. Here are a few tips that can make the process go a lot easier.

**BLANK SIZE.** The strips are cut from a blank that's a bit thicker (about 1/64") than the plywood. This way, you don't have to align the strips perfectly as they're glued on. Masking tape works well as a clamp. Center the strip over the plywood panel and tape it in place. After the glue dries, it only takes a few passes with a sanding block or card scraper to bring them flush.

**THE RIGHT ORDER.** It pays to have a plan for attaching the strips, so you end up with a consistent appearance. Here's my strategy: start with the outside vertical strips. From there, apply the longest horizontal strips next. Then just repeat the pattern as you work your way in — the longest vertical piece followed by the next longest horizontal piece.

**SHELVES.** The lower case has two large openings. To divide the space further, I made a pair of plywood shelves. These rest on adjustable pins that allow you to customize the compartments to suit your needs, as you can see in Figure 4b. Like the cases, the front edge of each shelf is covered with hardwood edging.

**DOORS.** The tool cabinet has three doors to enclose some of the storage compartments. The door in the upper cabinet is unique since it folds down. All three doors are joined with stub tenons and grooves (Figure 5 on the opposite page). The centered grooves match the thickness of the 1/4" plywood panels. Simply cut the stub tenons to fit the grooves.

You'll notice that the lower doors have an additional stile, rail, and two panels, as shown

## Brass Hardware

**Pulls & Plates.** Flush pulls are mortised into doors and drawers. Shop-made brass plates connect the cases and keep them aligned.

**Corners.** Wrap-around chest corners protect the top edges and straps cover the lower corners.

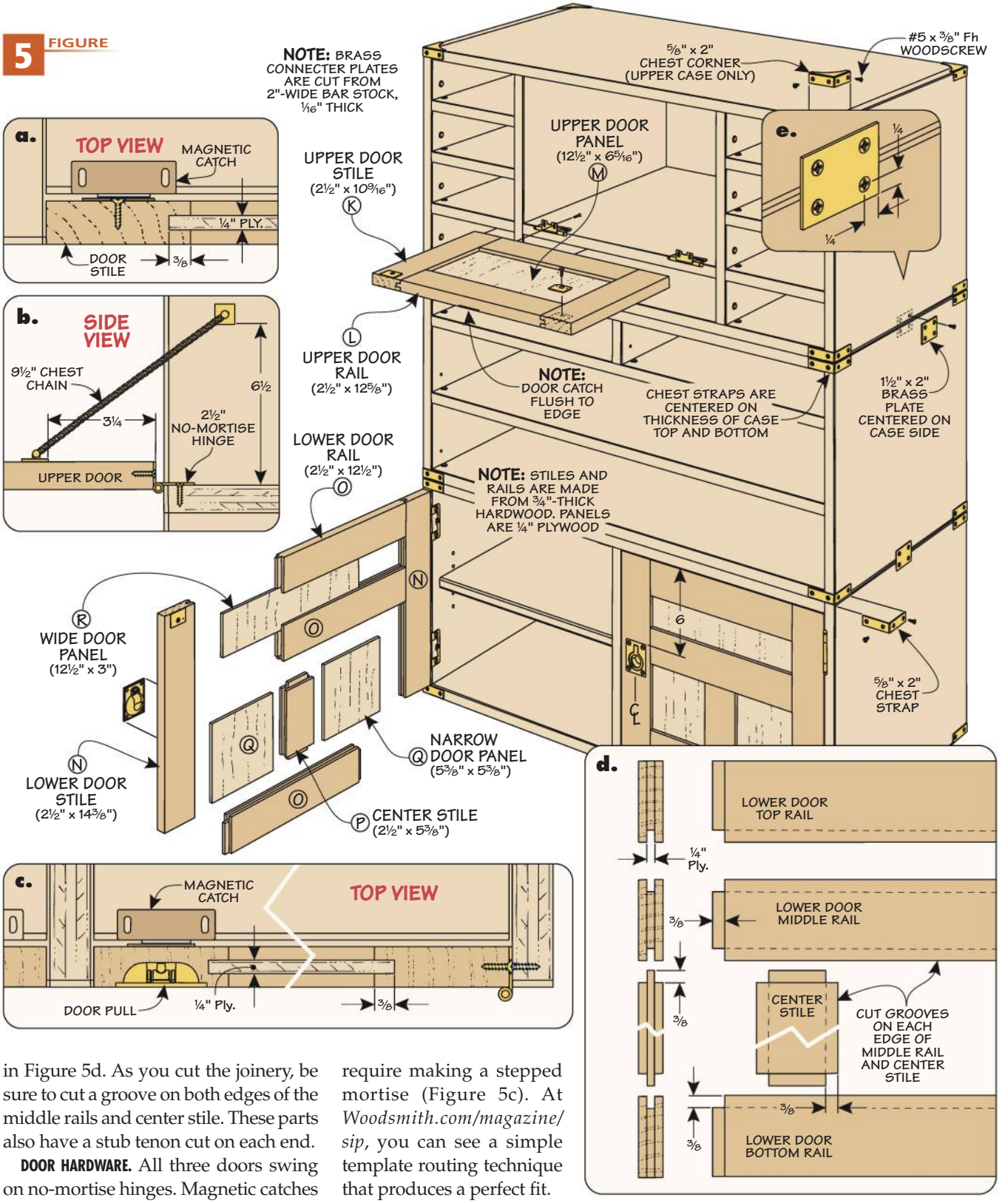


in Figure 5d. As you cut the joinery, be sure to cut a groove on both edges of the middle rails and center stile. These parts also have a stub tenon cut on each end.

**DOOR HARDWARE.** All three doors swing on no-mortise hinges. Magnetic catches hold them closed. For the upper door, I added a pair of chains to hold the door level when it's opened.

Campaign furniture often used flush-mounted pulls on the doors and drawers. This keeps the pulls from catching on anything during transit. The pulls require making a stepped mortise (Figure 5c). At *Woodsmith.com/magazine/sip*, you can see a simple template routing technique that produces a perfect fit.

**CASE HARDWARE.** While on the move, campaign furniture is vulnerable to damage at the corners. To protect them, L-shaped brass corners are added, as shown in Figure 5. These are simply screwed into place centered on the thickness of the case top and bottom. Wrap-around corner protectors are used on the top of the upper case. Here again, they're simply screwed to the surface. Finally, I made some brass plates to connect the cases to each other.

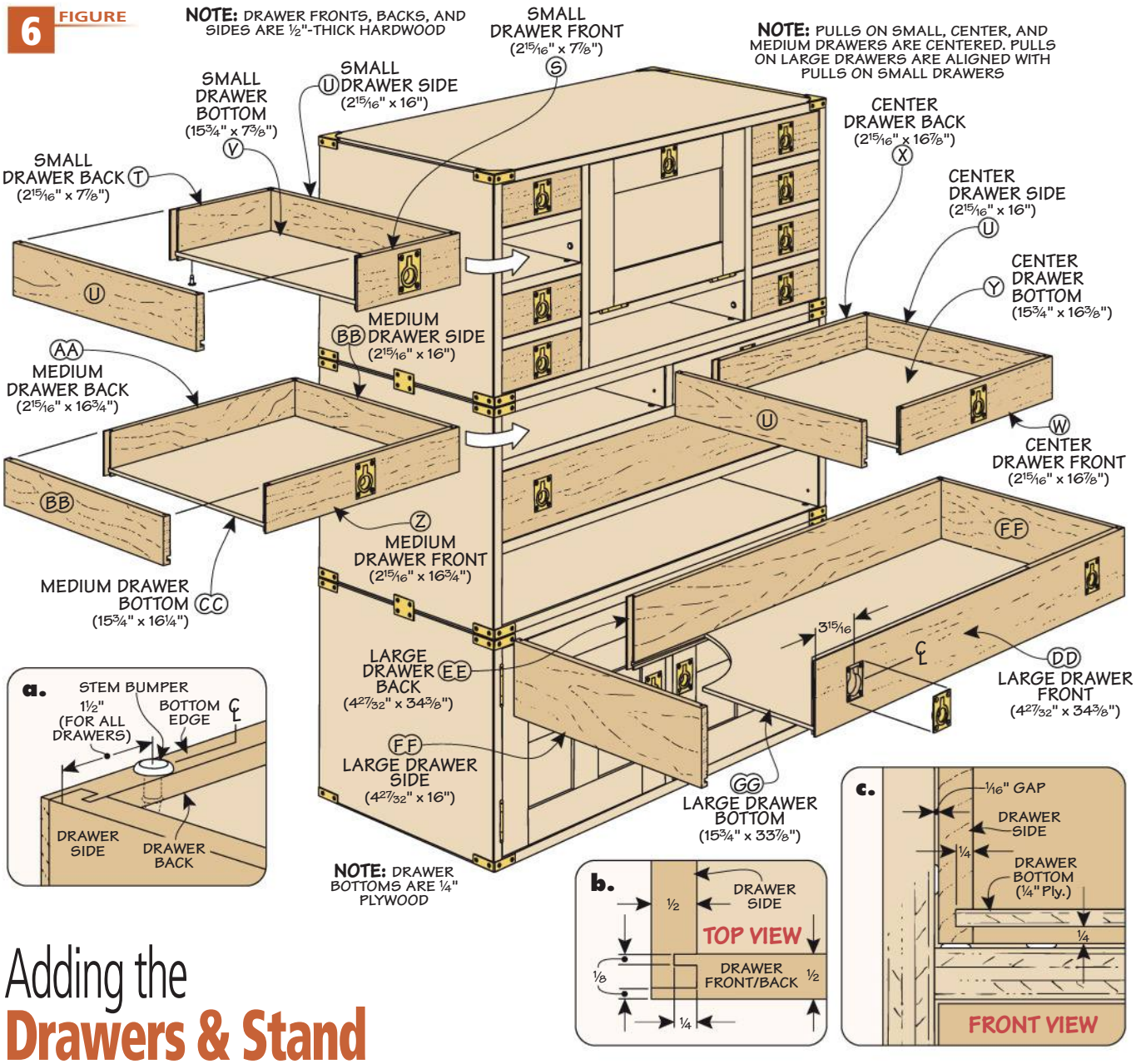


# Adding the Drawers & Stand

A look at Figure 6 shows that the next step involves making quite a few drawers. The main advantage here is flexibility. Having a range of drawer sizes means small tools and accessories aren't as likely to get lost. The larger drawers are perfect for storing big or long items like squares, rules, handsaws, and even some sizable hand planes.

There are nine drawers in the upper case and four in the middle case. (The lower case just has the two doors you've already made.) I know it sounds like a lot, but there are only four drawer sizes. So you'll be making the parts in batches, and the steps move along pretty quickly.

**CUTTING PARTS.** While there are drawers in a variety of sizes, they share a common method of construction. So I began by making up stacks of drawer parts. The drawer fronts, backs, and sides are made from ½"-thick material to save weight and maximize the space inside each of the drawers.

You'll want to size the fronts and backs to fit the openings between the stem bumpers. (Take note that the drawer fronts are quartersawn white oak while the backs and sides are made from maple.) When cutting the sides to length, be sure to take the joinery shown above into account.

**JOINERY.** Speaking of the joinery, I used locking rabbets at both the front and back of the drawer, as shown in Figure 6b. So once you're set up for each step, you can cut all the similar parts at one time at the table saw.

Here's a quick rundown of the process: first, cut a slot on each end of the front and back. Second, lay the part with the inside face down on the saw and trim back the inner tongue short, as you can see in Figure 6b.

This shortened tongue fits into a kerf cut into the mating drawer side. Careful layout and setup will result in a snug fit and a strong joint.

**BOTTOMS.** The final step is to cut a groove in all the drawer parts to hold the plywood bottoms. The location of the groove is shown in Figure 6c.

Now the drawers can be glued up. I added a pair of stem bumpers to the lower edge of each drawer back, as illustrated in Figure 6a. This keeps the drawer level in the case.

## STURDY STAND

The home stretch of the project involves building a stand to support the cases. It raises the cases off the floor to a more comfortable height. The emphasis here is stout construction to support all the weight of the cases and the tools stored inside.

**LEGS.** Building a rock-solid stand starts with the legs, as shown in Figure 7. The legs are glued up to create square blanks. They're strong, but I still wanted them to look good. To cover the glue line and get a quartersawn look on all four faces, I glued thin pieces of veneer to the sides. (There's an article about making your own veneer you can find at *Woodsmith.com/magazine/sip*.) A roundover routed along the bottom edges of the legs prevents them from chipping if the cabinet ends up sliding across the floor at some point.

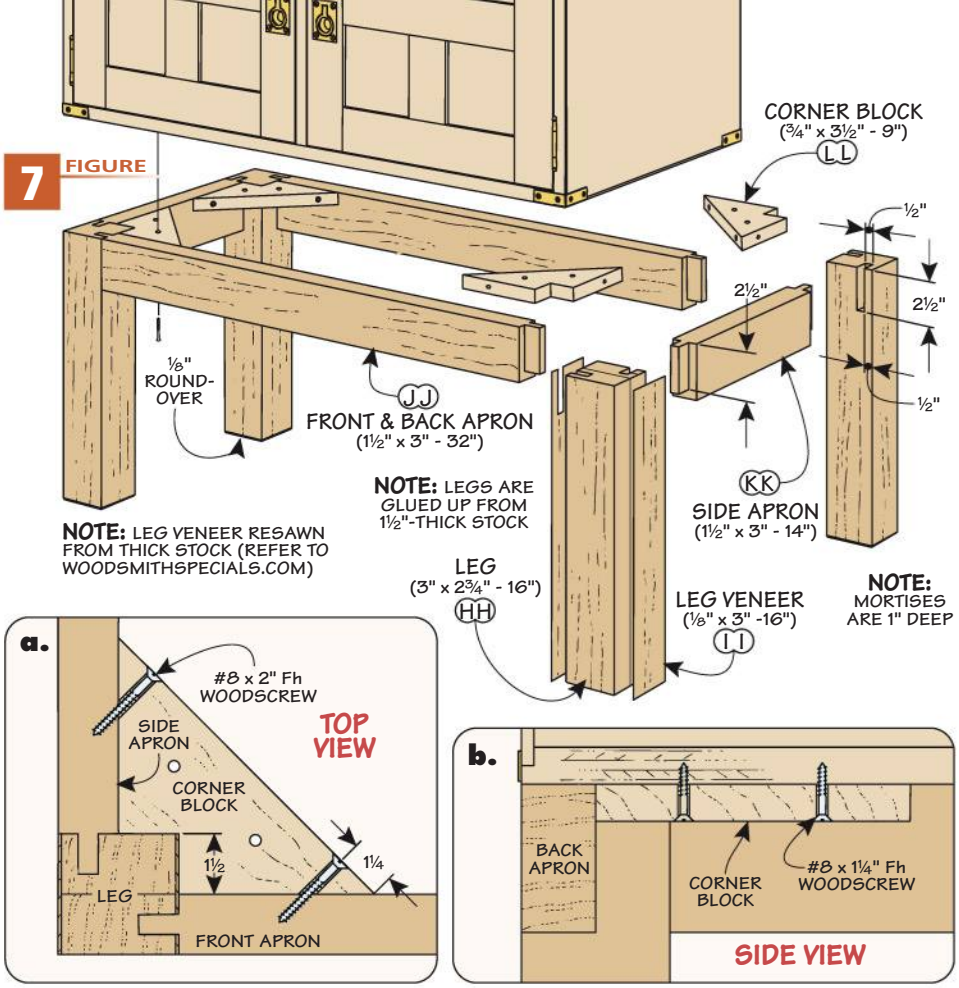


**MORTISE & TENON.** The legs and aprons are assembled with mortise and tenon joinery. The top of the mortise is open, and the mating tenon doesn't have an upper shoulder (Figure 7).

To strengthen the joint and provide mounting points for the lower case, I added corner blocks (Figure 7a). Cut a notch in each block to wrap around the leg. These are glued and screwed in place. Organizing the cabinet is the final step. The result is one fine-looking home for your tools, keeping them organized, safe, and close at hand.

## MATERIALS & SUPPLIES

| | | |
|---|---|---|
| A | Case Sides (6) | 17⅞ x 15¾ - ¾ Ply. |
| B | Edging | ⅛ x ¾ - 540 rgh. |
| C | Case Tops/Bots. (6) | 17⅞ x 35 - ¾ Ply. |
| D | Vertical Dividers (3) | 17⅝ x 15 - ¾ Ply. |
| E | Horizontal Dvdrs. (2) | 17⅝ x 35 - ¾ Ply. |
| F | Middle Divider (1) | 17⅝ x 17½ - ¾ Ply. |
| G | Case Backs (3) | 15¼ x 35¼ - ¼ Ply. |
| H | Side Dividers (6) | 17⅝ x 8½ - ¾ Ply. |
| I | Small Divider (1) | 17⅝ x 3 9/16 - ¾ Ply. |
| J | Shelves (2) | 16¾ x 16¾ - ¾ Ply. |
| K | Upper Door Stiles (2) | ¾ x 2½ - 10 9/16 |
| L | Upper Door Rails (2) | ¾ x 2½ - 12⅝ |
| M | Upper Door Panel (1) | 12½ x 6 5/16 - ¼ Ply. |
| N | Lower Door Stiles (4) | ¾ x 2½ - 14⅜ |
| O | Lower Door Rails (6) | ¾ x 2 - 12½ |
| P | Center Stiles (2) | ¾ x 2½ - 5 ⅜ |
| Q | Narrow Door Panels (4) | 5⅜ x 5⅜ - ¼ Ply. |
| R | Wide Door Panels (2) | 12½ x 3 - ¼ Ply. |
| S | Sm. Drwr. Fronts (8) | ½ x 15/16 - 7⅞ |
| T | Sm. Drwr. Backs (8) | ½ x 15/16 - 7⅞ |
| U | Sm. Drwr. Sides (18) | ½ x 15/16 - 16 |
| V | Sm. Drwr. Bot. (8) | 15¾ x 7⅜ - ¼ Ply. |
| W | Cent. Drwr. Front (1) | ½ x 2 15/16 - 16⅞ |
| X | Cent. Drwr. Back (1) | ½ x 2 15/16 - 16⅞ |
| Y | Cent. Drwr. Bot. (1) | 15¾ x 16⅜ - ¼ Ply. |
| Z | Med. Drwr. Fronts (2) | ½ x 2 15/16 - 16¾ |
| AA | Med. Drwr. Backs (2) | ½ x 2 15/16 - 16¾ |
| BB | Med. Drwr. Sides (4) | ½ x 2 15/16 - 16 |
| CC | Med. Drwr. Bot. (2) | 15¾ x 16¼ - ¼ Ply. |
| DD | Lg. Drwr. Fronts (2) | ½ x 4 27/32 - 34⅜ |
| EE | Lg. Drwr. Backs (2) | ½ x 4 27/32 - 34⅜ |
| FF | Large Drwr. Sides (4) | ½ x 4 27/32 - 16 |
| GG | Lg. Drwr. Bot. (2) | 15¾ x 33⅞ - ¼ Ply. |
| HH | Legs (4) | 3 x 2¾ - 16 |
| II | Leg Veneer (8) | ⅛ x 3 - 16 |
| JJ | Front/Back Aprons (2) | 1½ x 3 - 32 |
| KK | Side Aprons (2) | 1½ x 3 - 14 |
| LL | Corner Blocks (4) | ¾ x 3½ - 9 |

- (78) Nylon Stem Bumpers
- (6) 2½" x 1" No-Mortise Hinges w/ Screws
- (18) 1 11/16" x 2¼" Recessed Finger Pulls
- (112) #5 x ⅜" Fh Brass Woodscrews
- (4) Magnetic Catches w/Screws
- (2) 7½" Chest Chains
- (20) ⅝" x 2" Chest Straps
- (4) ⅝" x 2" Chest Corners
- (1) 2" x 12" - 1/16" Brass Bar Stock
- (8) #8 x 2" Fh Woodscrews
- (8) #8 x 1¼" Fh Woodscrews

# Classic Oak Tool Cabinet

A series of drawers and heavy-duty trays combine with quartersawn oak and a few simple techniques to create one fine and functional cabinet.

# Construction Details

**OVERALL DIMENSIONS:**
36¼" W x 48" H x 20" D

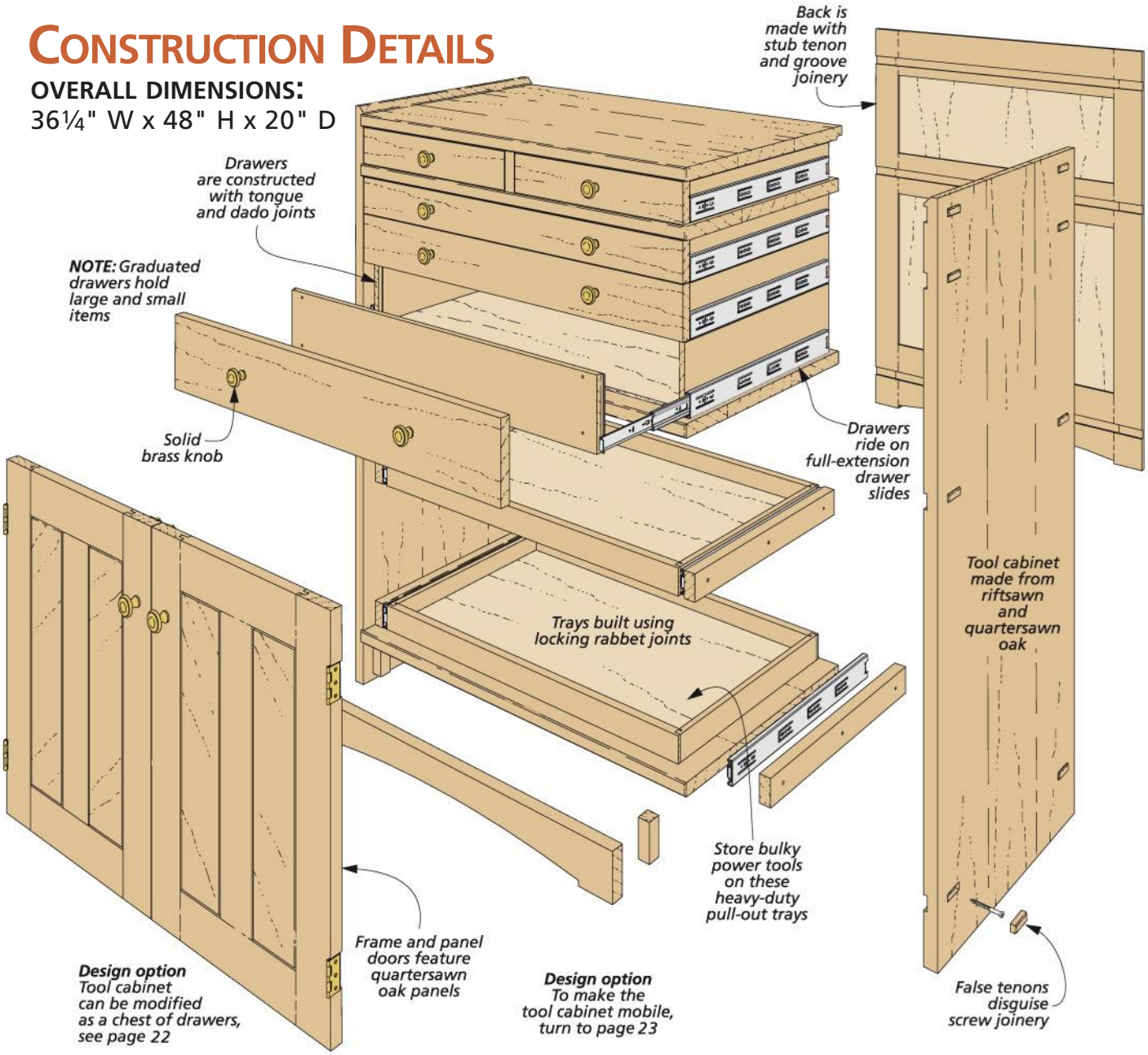

**Heavy-Duty Trays.** Perfect for portable power tools and other accessories. Now nothing will get lost in the back.

**Easy-Access Drawers.** Using smooth-riding slides make finding and organizing tools a snap in the shallow drawers.

**False Tenons.** Get the look of more complex through-mortise and tenon joinery with tenons like these.

# Lower Case **Construction**

I like to think of this tool cabinet as a trusty sidekick to my workbench. I do most of my work at or near my bench, from planing and routing to trimming joints and assembly. So it's important to have all the tools I need close at hand.

When it comes to building a big project like this, it can be a little intimidating. So I find it's helpful to step back and break it down into sections so you don't get overwhelmed by the details. That's what I did here. The tool cabinet is made up of four different elements: the case, the doors, the drawers, and the trays.

**SOLID-WOOD CONSTRUCTION.** The first section of the cabinet to build is the case, as shown in the drawing at right. Since all the case members are the same thickness, I glued up all the parts at one time. With such large solid-wood panels, it's a good idea to spend some extra time in selecting and arranging your stock for color, grain, and appearance.

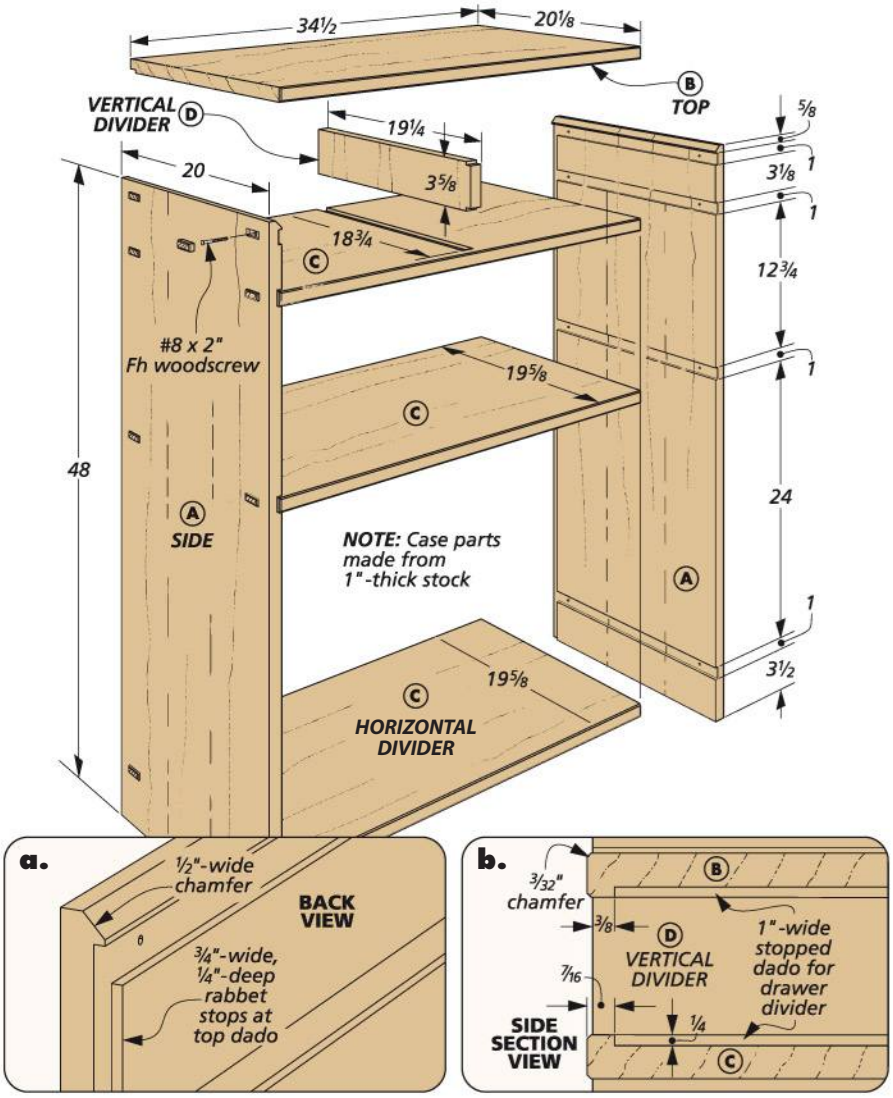


**DADO JOINERY.** At first glance, it looks like the case is built with through-mortise and tenon joinery. However, the tenons you see are simply plugs. They hide long woodscrews that secure the sides to the horizontal parts. Dadoes on the inside of the case help support the dividers. Using false tenons and screws gives you a traditional look without all the work.

The case is assembled with simple dado joints. You can cut the dadoes with either a table saw or hand-held router. It's not important how you cut the dadoes, but because the ends of the dadoes are visible, it is important that the bottoms of the dadoes are smooth and flat.

**SIDE DETAILS.** Before moving on to the dividers, there are a few more things you'll need

## **Chamfer** & Slides

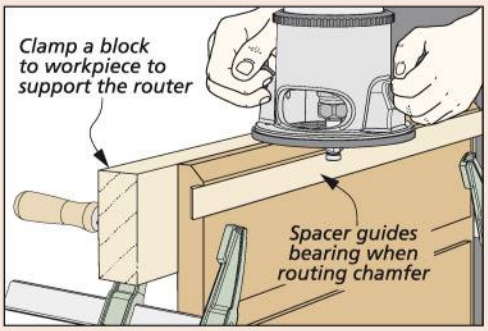


**Routing the Chamfer.** A support board clamped to the case side and a spacer in the dado allow you to easily rout the chamfer.

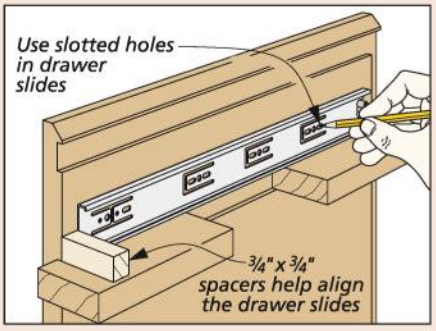


**Drawer Slides.** Pre-drill the holes for the top drawer slides before assembly. Support blocks and a spacer keep things aligned.

to do to the sides. First, cut a chamfer along the top inside edge of each side panel. Take a look at the left box for a tip on the best way to do this.

The second thing to do is rout a rabbet on the back edge to hold a frame and panel back that is made later (detail 'a' on previous page). This rabbet is stopped at the top divider dado and doesn't run the whole length of the side.

The last thing you'll need to do is rout small mortises in each side to hold some false tenons that hide woodscrews. I used a simple router template to do this. It's shown below. Even though the case is going to be glued, the end-grain joints need some screws for reinforcement.

**SIMPLE DIVIDERS.** At this point, you can set aside the sides and work on the dividers. These are the horizontal panels that make the top, bottom, drawer, and cabinet dividers. You can see the dimensions for each divider in the drawing on the previous page.

The front edge of each divider sits proud of the case sides and is chamfered on the front. Alongside that, the top piece of the case and the upper horizontal divider have centered, stopped dadoes cut in each panel to hold a short, vertical divider between a pair of narrow drawers, as you can see in detail 'b' on the previous page.

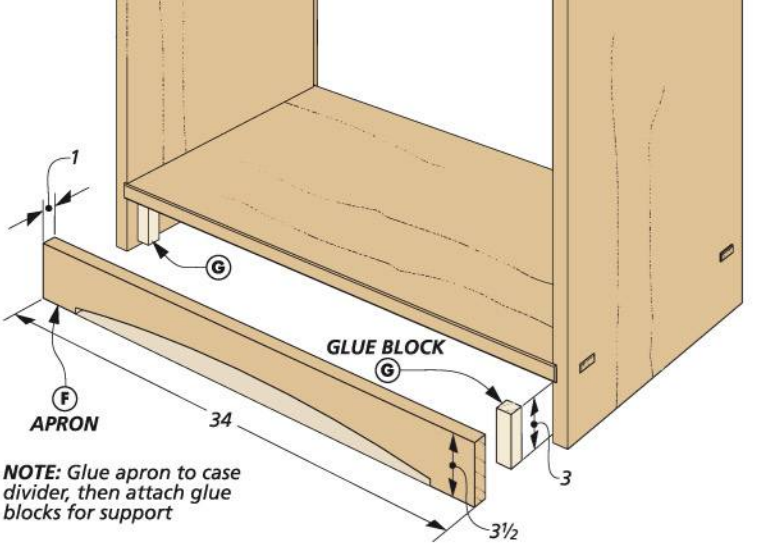


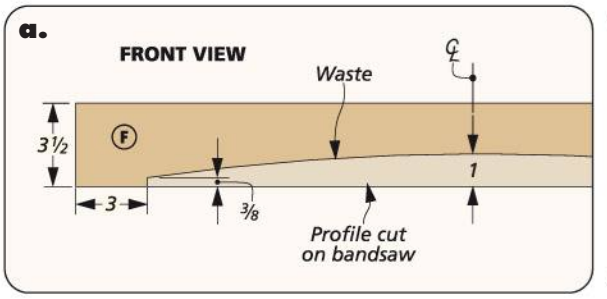


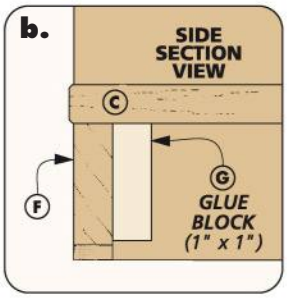


There's one last thing to do before assembling the case. I chose to install the drawer slides for the two upper drawers while everything was still seperate. I did this now because after the case is together, it will be nearly impossible to reach in the small opening to drill the holes and align the slides. Take a look at the right drawing at the bottom of the previous page to see how I did this. The case can then be assembled.

**APRON & GLUE BLOCK.** To complete the front of the case, I added an apron at the bottom, as in the drawing above. It has a shallow arch and is glued to the divider above and a pair of glue blocks. You can always add on casters later to make the cabinet mobile (page 23).

# Hiding Screw Jointes with False Tenons

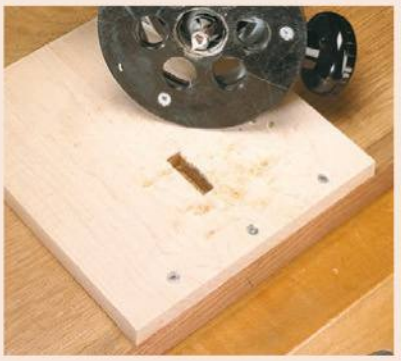

**Template Routing.** A router template and a hand-held router are all it takes to cut the shallow pockets for the false tenons. Set the depth of cut, plunge the bit down, then rout back and forth.

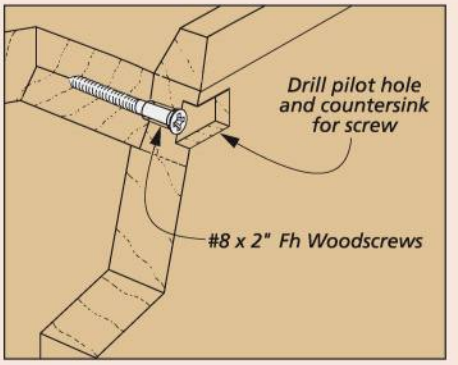


**Woodscrew Reinforcement.** After routing the pocket for the false tenon, square up the corners with a chisel and drill a countersunk shank hole and pilot hole for the 2"-long woodscrew.

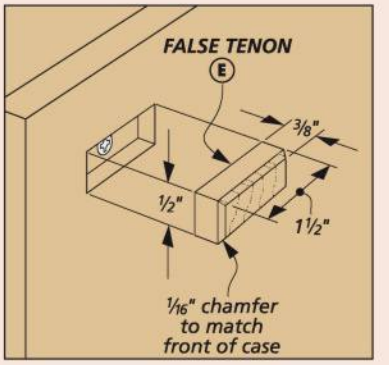


**Hide the Screws.** Chamfered false tenons fit snugly in the pockets routed in the cabinet sides and hide the woodscrews. Once they're made, simply glue them in place.

# Frame & Panel
# Case Back & Doors

All that remains to complete the case of the tool cabinet is the back. The back assembly is made with simple stub tenon and groove joints. For step-by-step instructions on how to make this strong joint, take a look at the "How-To" below.

**STRENGTHENING THE CASE.** Besides closing in the case, the back also adds strength. You can see what I mean in the exploded view at right. First, it fits into the rabbets cut in the sides of the case. This prevents the case from racking. After the back is glued up, a series of dadoes and grooves are cut to fit over the horizontal dividers to keep the large case rigid and square.

**BUILDING THE BACK.** I began by cutting grooves on the inside edges of the stiles and rails. Then stub tenons can be cut on each end of the rails. Note: The joinery for the door frames is identical to the back. To save time, you could cut the door rails and stiles here as well.

Once the joinery is complete, I cut a small arch in the bottom rail to match the front skirt, as shown in detail 'c.' Finally, ¼" plywood panels are cut to fit the grooves. Now the back assembly can be glued together (including the panels). Note: The bottom rail sits ⅜" up from the ends of the stiles. Finally, I routed grooves to fit over the dividers and a small shadow line around the outside edges, as in detail 'a.'

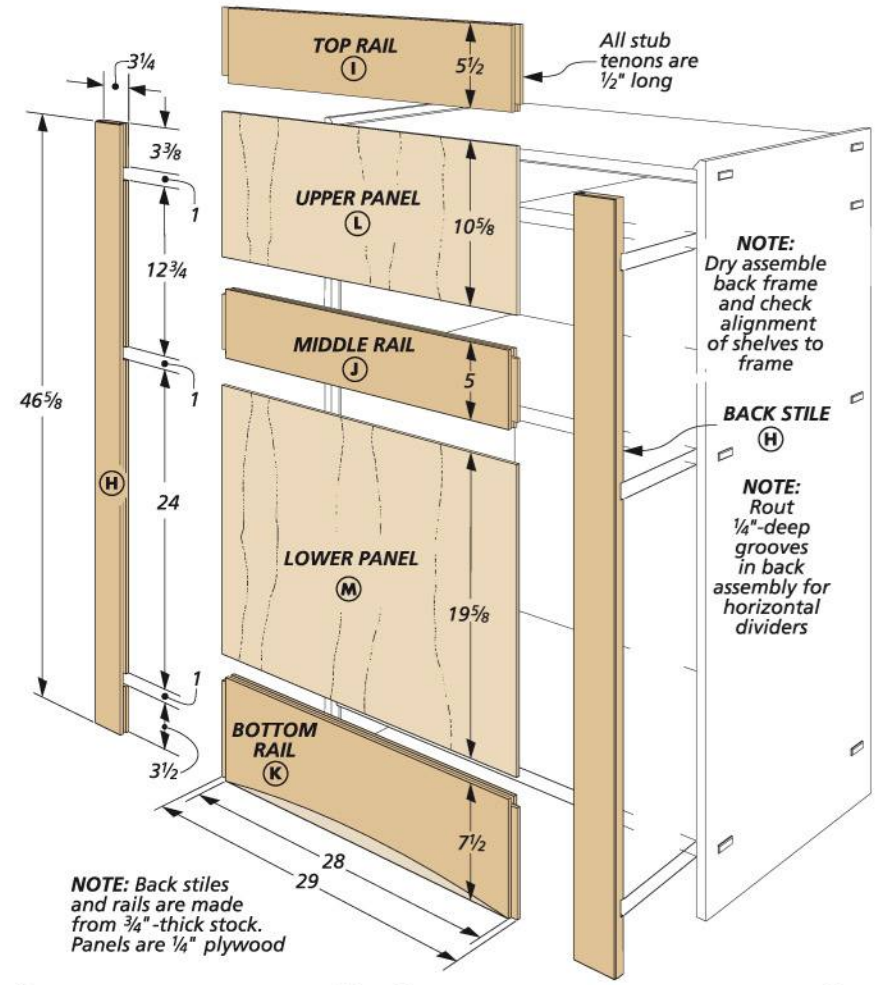


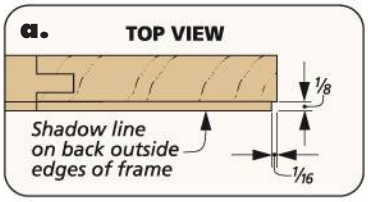


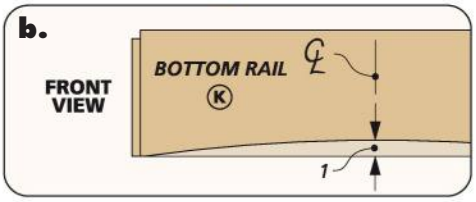


# Stub Tenon & Groove Panels

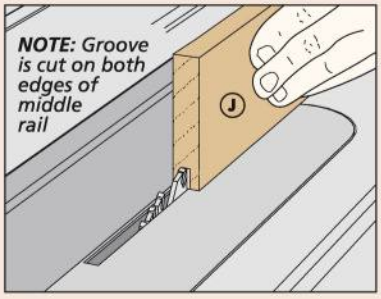


**Grooves.** First, cut a ½"-deep, centered groove on the inside edge of the rails and stiles. The groove is sized to match the ¼" plywood.

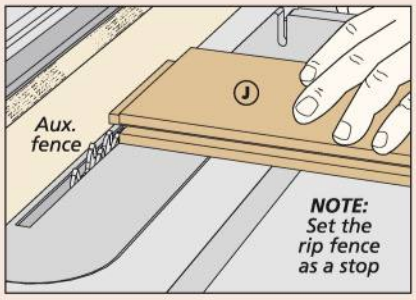


**Tenons.** The next step is to cut the stub tenons on the ends of the rails. Position the rip fence as a stop and cut the stub tenons with a dado blade.

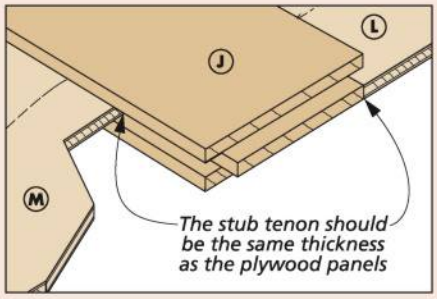


**Panels.** The center panels are sized to fit between the stiles and rails. Plywood panels can be glued in place. Solid-wood door panels are allowed to float in the grooves.

## SOLID-WOOD DOORS

With the case complete, I moved on to building the doors. Like I mentioned earlier, the joinery here is the same as the case back. There's one difference between the doors and the back. The panels in the doors are solid wood, instead of plywood. They're solid wood for appearance. I wanted them to look as good when they were open as closed. To make them stand out from the frame, I selected straight-grained (riftsawn) stock for the frame parts and used highly figured quartersawn wood for the door panels.

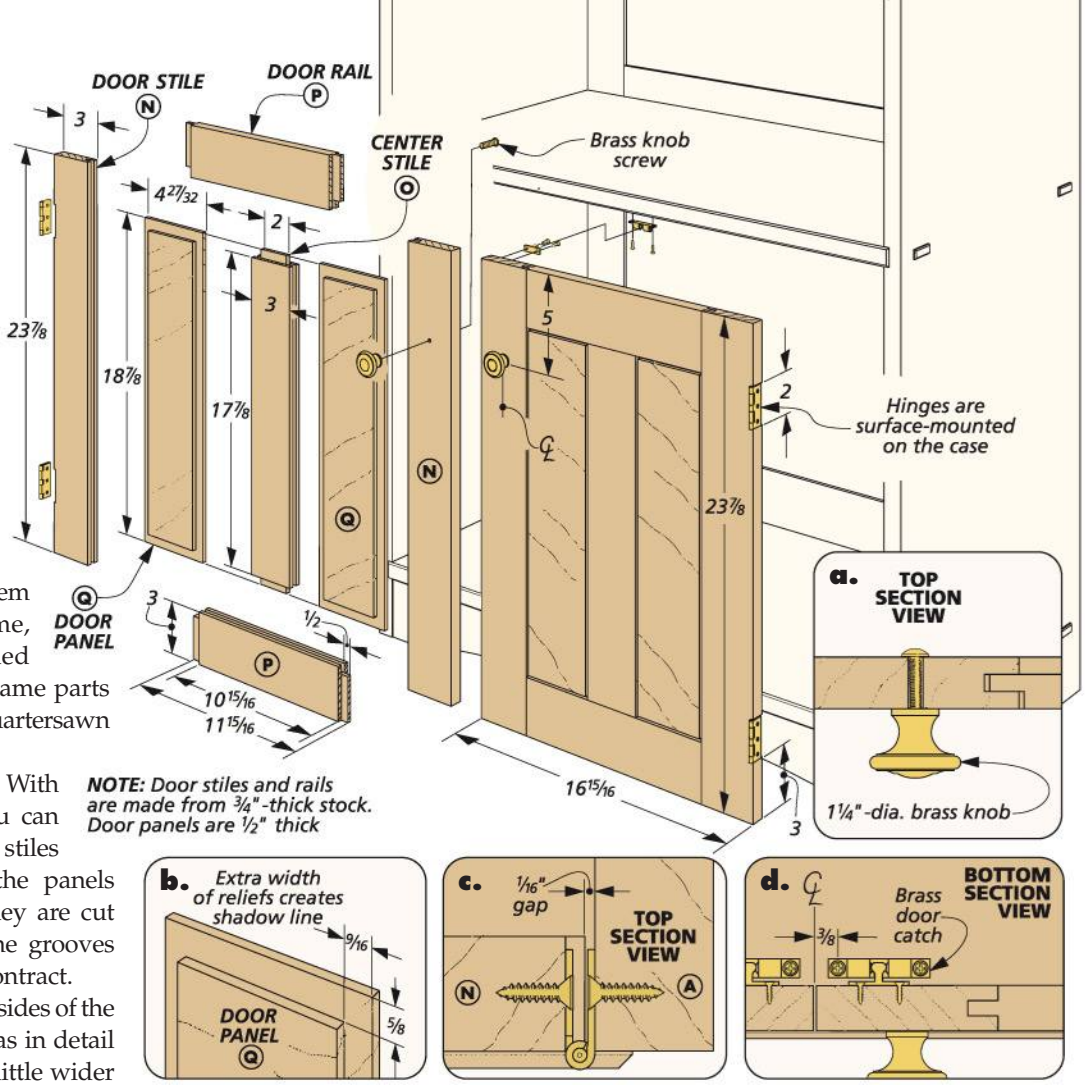


**NOTE:** Door stiles and rails are made from ¾"-thick stock. Door panels are ½" thick

**ADDRESSING WOOD MOVEMENT.** With the parts cut to size, you can then cut the joinery on the stiles and the rails. Because the panels are solid-wood pieces, they are cut slightly narrower than the grooves so they can expand and contract.

Next, I rabbeted all four sides of the panels to form a tongue, as in detail 'b.' The rabbets are cut a little wider than the grooves to create a shadow line so that they stand out even more.

At this point, you can assemble the doors. I applied glue only to the stiles and rails. The panels need to "float" in the grooves to expand and contract. But to keep the panels centered in the frame, I applied a dot of glue at the top and the bottom of the panels and used some spacers while clamping. It's also a good idea to stain them as well, as you can see in the Shop Tips below.

**HANGING THE DOORS.** The doors can now be hung in the case. To do this, I cut shallow notches in the sides of the doors (detail 'c') to hold the hinges. The notches are ⅛" less than the thickness of the hinge knuckle. The hinges will be surface mounted on the inside of the case. Then the doors can be trimmed to fit. All that's left is to attach the knobs and catches, as in detail 'd.'

# Shop Tips: Great Panels

**Trick to Glue.** To keep the panels centered in the doors, I placed a dot of glue in the center of the tongue and used thin spacers while gluing up the door.

**But First, Stain.** Staining the panels before assembling the doors prevents unfinished areas from appearing as the panels expand and contract seasonally.

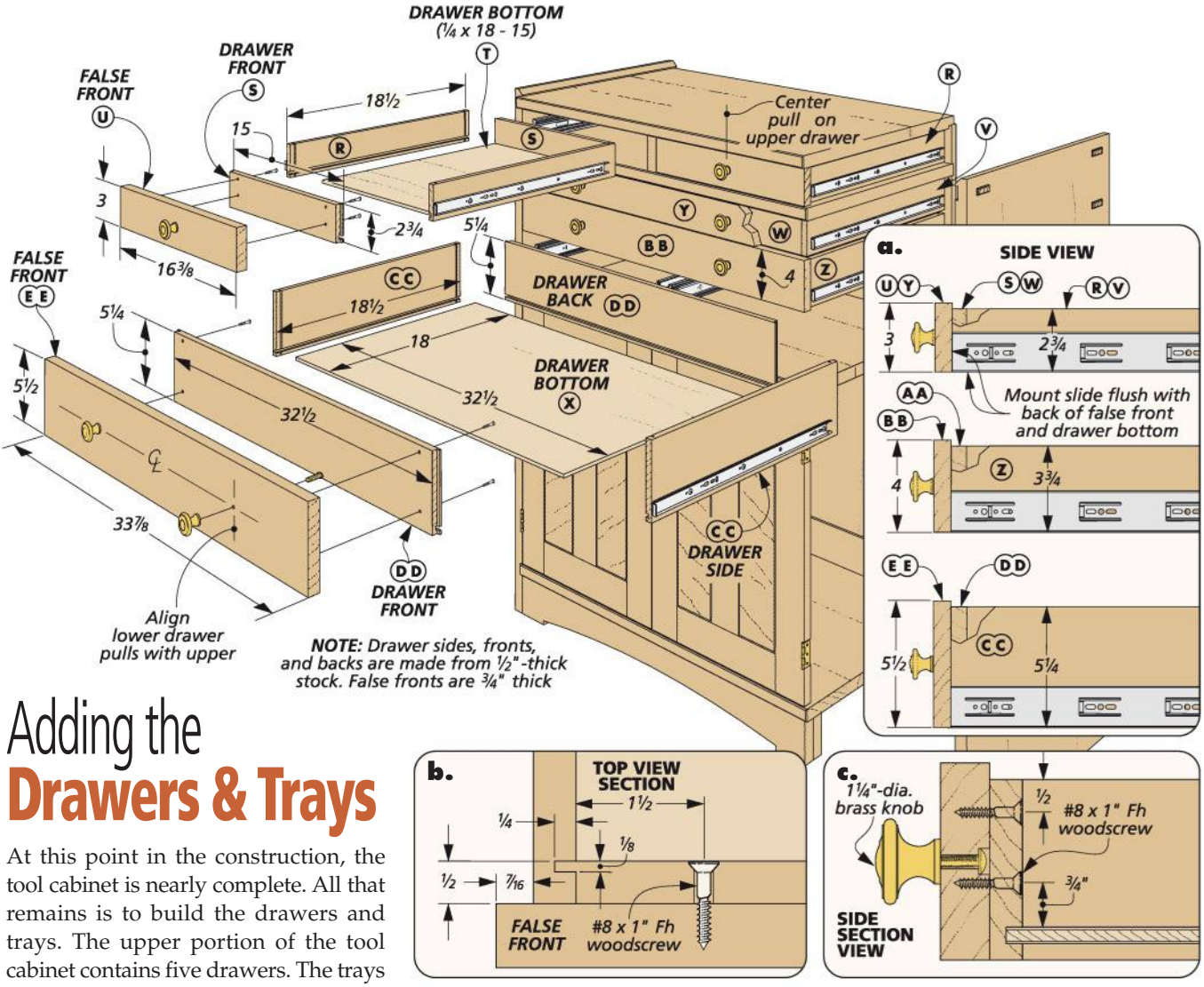


# Adding the Drawers & Trays

At this point in the construction, the tool cabinet is nearly complete. All that remains is to build the drawers and trays. The upper portion of the tool cabinet contains five drawers. The trays divide the space behind the doors in the bottom of the cabinet (more on that later). Both the drawers and the trays ride on full-extension, metal slides. While the construction here is similar between the drawers, there are a few differences to point out.

**SIMPLE CONSTRUCTION.** The drawing above shows how the drawers are made. Each drawer is nothing more than a shallow box with a false front. I built the boxes from maple and the false fronts from quartersawn white oak.

The boxes are built with simple tongue and dado joinery, as shown in detail 'b.' A dado is cut at the front and back of each side. A matching tongue is then cut on each end of the front and back.

Once the joinery is cut, you can then cut a groove on the inside face of all the parts to hold a ¼" plywood bottom. Then the drawer boxes can be glued up.

The next step is to attach the drawer slides. The full-extension slides come in two parts. One part is screwed to the side of the case. The second part is attached to the bottom edge of the drawer box.

**FITTING THE FALSE FRONTS.** Once the drawers are in place, I made and attached the false fronts. I wanted to end up with a 1/16" gap on all four sides (to match the doors) so I cut the false fronts slightly oversize and trimmed them to fit the opening. The photo at left shows a simple way to position the false fronts. When the false front is in the right spot, the tape holds it in place for drilling the screws holes, as shown in the tip at left. The last thing to do before attaching the false fronts, is to add the pulls, as in detail 'c.'

## Shop Tip: False Front Fit

**Perfect Fit.** A few strips of carpet tape keep the false front positioned for the proper gaps and hold it firmly in place for drilling the screw holes.

## HEAVY-DUTY TRAYS

After making the drawers, I turned next to the trays that will be installed in the lower portion of the tool cabinet. This large space is perfect for storing portable power tools. Like the drawers, each tray rides on full-extension slides. This makes it a lot easier to find something at the back of the tray. Storing heavy tools here means the trays need to be strong enough to stand up to the weight.

**BUILT FOR STRENGTH.** There are two things you can do to beef up the construction. The first is the joinery. For the trays, I used a locking rabbet. In detail 'a,' you can see that the sides, front, and back interlock to create a joint more rugged than a tongue and dado. To make this joint, check out the three-step process that you see below.

The second thing you can do to beef up the trays is to strengthen the materials. Here I did two things. The first is to make the front and back from ¾"-thick hard maple instead of ½" material. The other thing I did was beef up the ¼" plywood normally used for drawer and tray bottoms.

To reinforce the tray bottom, I made it out of a double layer of ¼" plywood. The first layer is glued into a ¼" groove cut in the tray sides, front, and back. The second layer is cut to fit underneath the first (detail 'b'). This adds rigidity to the tray bottom, keeping it from flexing under a heavy load.

**MOUNTING THE TRAYS.** Finally, I installed the trays. In order for the trays to clear the doors, they're mounted to a pair of spacers (shown in detail 'c'). The spacers are attached using screws and washers in oversized, counterbored holes. This allows the case to expand and contract.

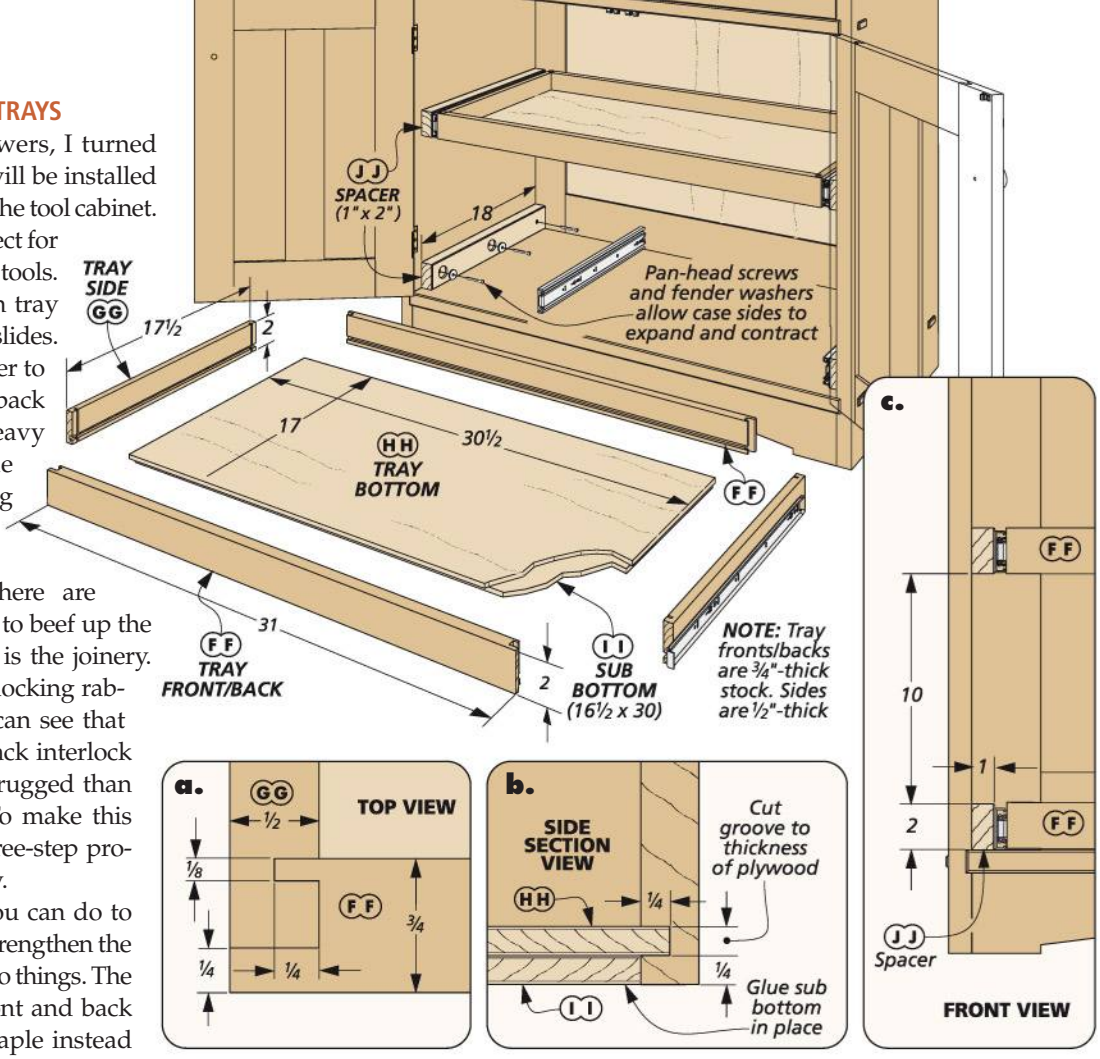


# Locking Rabbet Joint

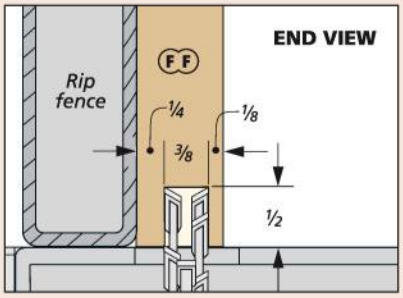


**Slot.** To make a locking rabbet, start by cutting a slot in each edge of the front and back. The depth of the slot should match the thickness of the sides.

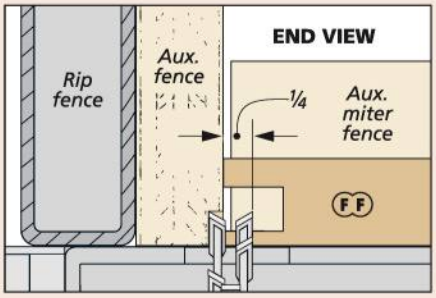


**Tongue.** Next, cut the inside tongue of the slot back. I set the rip fence as a stop and supported the workpiece with an auxiliary fence on the miter gauge.

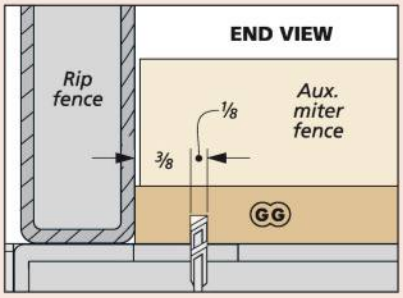


**Dado.** Finally, cut a dado in the sides. The dado should match the tongue on the front and back. The remaining tongue should just slip inside the slot.

# High-Style Chest of Drawers

Even though it's a shop project, the heirloom tool cabinet looks good enough to be a piece of furniture. And with a few changes, you can easily transform this tool cabinet to a handsome chest of drawers, as shown in the drawing at right.

You can replace the doors and trays at the bottom with a few drawers. Since the drawers in the upper part aren't all the same size, it's a good idea to size the new drawers a little different as well. The first two, lower drawers are a little deeper than the ones above it. And the bottom drawer is even larger. To keep things simple, they all share the same construction as the five upper drawers.

## MATERIALS & SUPPLIES

| | | |
|---|---|---|
| A | Drawer Sides (4) | ½ x 6¾ - 18½ |
| B | Drawer Fronts/Backs (4) | ½ x 6¾ - 32½ |
| C | Drawer Bottoms (3) | ¼ ply. - 18 x 32½ |
| D | False Fronts (2) | ¾ x 7 - 33⅞ |
| E | Bottom Drawer Sides (2) | ½ x 9½ - 18½ |
| F | Bottom Drawer Fronts/Backs (2) | ½ x 9½ - 32½ |
| G | Bottom Drawer False Front (1) | ¾ x 9¾ - 33⅞ |

- (3 pr.) 18" Full-Extension Drawer Slides w/Screws
- (6) 1¼" Bright Brass Knobs w/Screws
- (12) #8 x 1" Fh Woodscrews

# Adding a Mobile Base

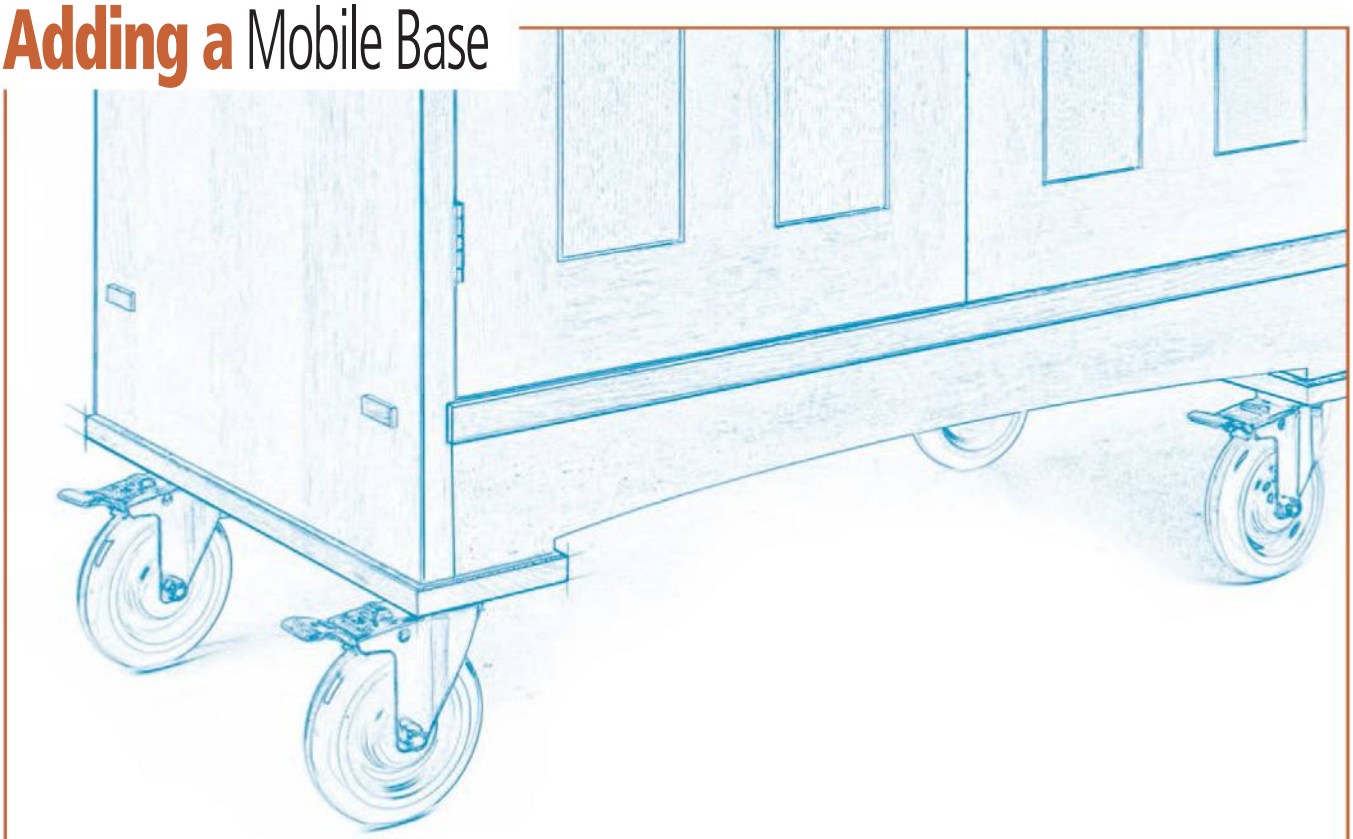

Positioning the tool cabinet near your workbench is a great way to keep your tools organized and close at hand when you need them. However, sometimes it's also nice to have those same tools close by when you're working on the other side of your shop.

To get around this problem, I added four casters to make the tool cabinet mobile. In the drawing at right you can see what I'm talking about. The casters make it easy to roll the cabinet wherever you need it. Ideally, they should be large enough to roll over power cords and whatever else might be laying around on the floor.

For optimal balance, the weight of the cabinet should be distributed evenly over the casters. To accomplish that, the casters are attached to a pair of mounting plates. To keep the plates in place, there's a wide rabbet cut on three sides. This rabbet registers against the front, back, and sides. Then, to keep the plates from sticking out like a sore thumb, I routed a chamfer on them, matching the other chamfer details on the rest of the cabinet.

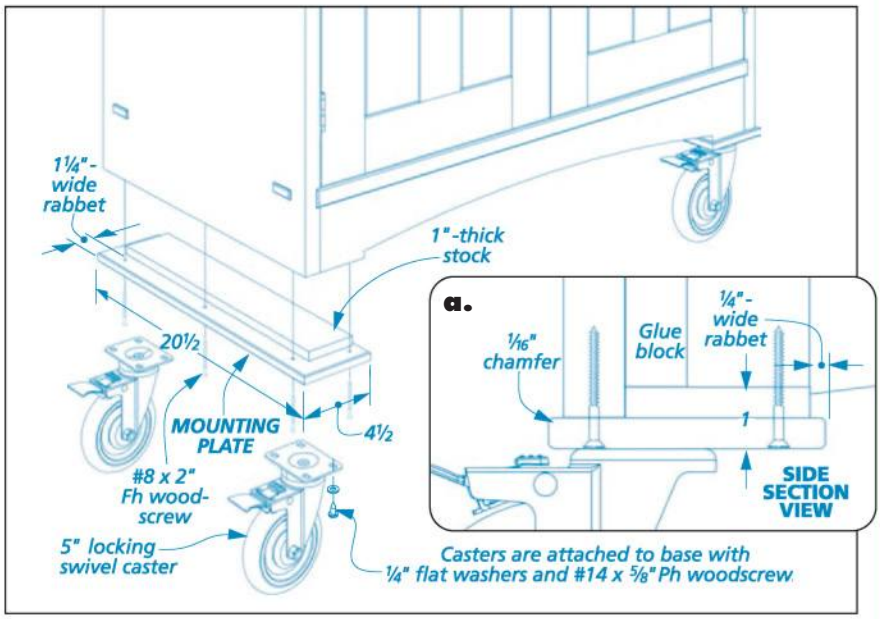


## MATERIALS & SUPPLIES

A Mounting Plates (2)1 x 4½ x 20½

- (10) #8 x 2" Fh Woodscrews
- (4) 5" Locking Swivel Casters
- (16) #14 x ⅝" Ph Woodscrews
- (16) ¼" Flat Washers

# Shaker Shop Hutch

The tool storage you need for the type of woodworking you do is a personal thing. It takes time to figure out what warms your soul and makes you want to spend time in the shop. That's when you'll know you've arrived in your woodworking journey and want to graduate from the mish-mash of cabinets that house your tools (old kitchen cabinets can only be modified so far).

**Options.** This is a two-part cherry cabinet that sports frame and panel joinery for the doors which enclose storage spaces that will meet all your needs. As you see in the photos here there is an array of drawers and trays that allow you to choreograph not only the storage of fine tools, but the ability to take them on the road to the workbench, or project at hand.

**Sliding Storage.** Drawers with slides handle the heavy stuff that you don't want banging around. Trays that ride on shop-made runners provide space for smaller, more often used tools.

# Construction Details

**OVERALL DIMENSIONS:**
36½" W x 70" H x 22" D

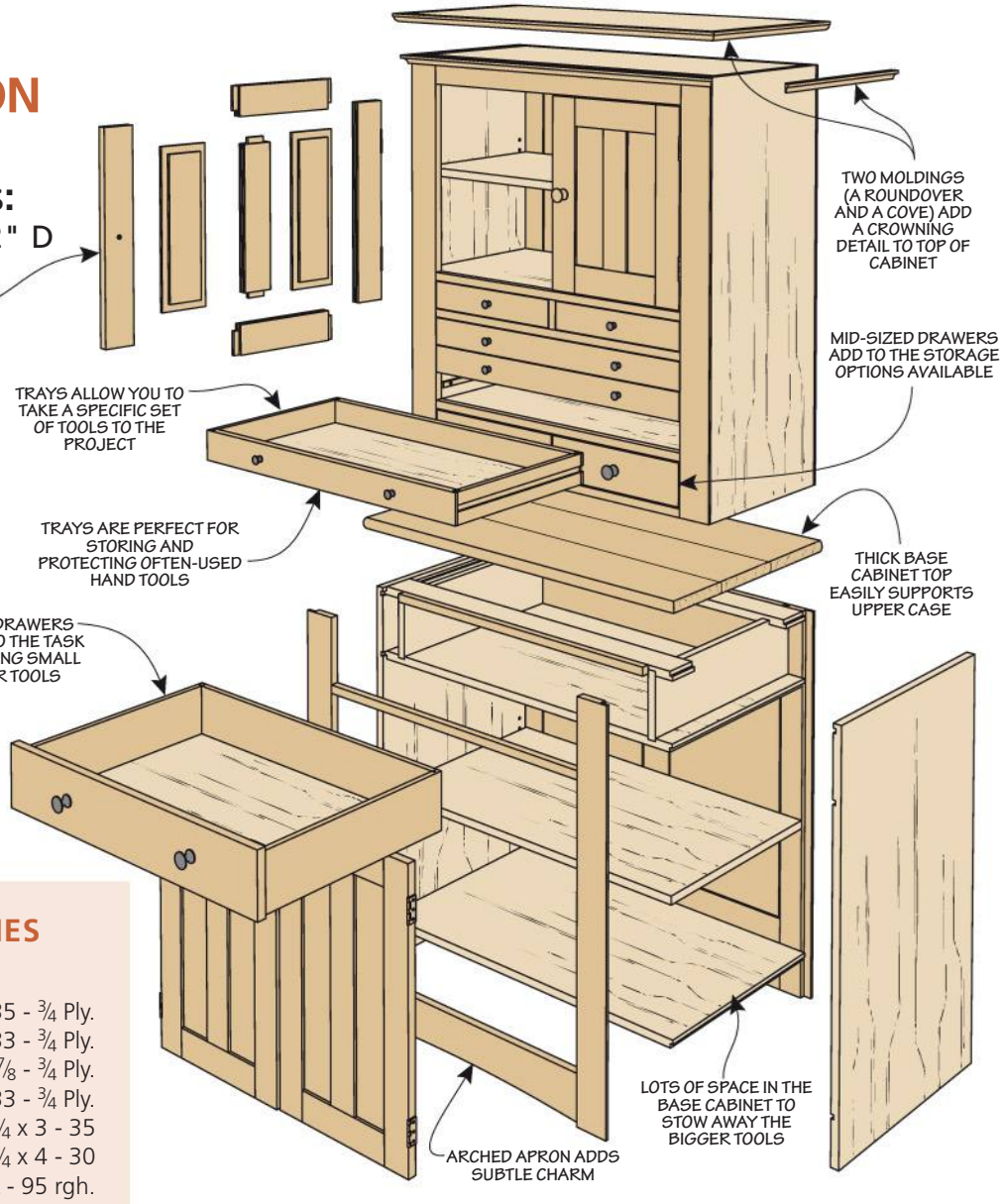


**NOTE:** MATERIALS AND HARDWARE LIST SEPARATES THE TWO CABINETS, GIVING YOU THE OPTION TO BUILD ONE AT A TIME.

**NOTE:** REFER TO SOURCES ON PAGE 99 FOR HARDWARE INFORMATION

## MATERIALS & SUPPLIES

### BASE CABINET

| | | |
|---|---|---|
| **A** | Sides (2) | 20½ x 35 - ¾ Ply. |
| **B** | Dividers (2) | 19½ x 33 - ¾ Ply. |
| **C** | Drawer Dividers (2) | 19½ x 5⅞ - ¾ Ply. |
| **D** | Mounting Cleats (2) | 3 x 33 - ¾ Ply. |
| **E** | Front Stiles (2) | ¾ x 3 - 35 |
| **F** | Apron (1) | ¾ x 4 - 30 |
| **G** | Edging | ¾ x ¾ - 95 rgh. |
| **H** | Back Stiles (2) | ¾ x 3 - 35 |
| **I** | Center Stile (1) | ¾ x 3 - 23 |
| **J** | Back Rails (2) | ¾ x 6½ - 29 |
| **K** | Back Panels (2) | ½ x 13⅜ - 23 |
| **L** | Base Shelf (1) | 18½ x 32⅜ - ¾ Ply. |
| **M** | Door Stiles (4) | ¾ x 2½ - 23⅝ |
| **N** | Door Center Stiles (2) | ¾ x 2½ - 19⅝ |
| **O** | Door Rails (4) | ¾ x 2½ - 9 13/16 |
| **P** | Door Panels (4) | ½ x 4 1/32 - 19⅝ |
| **Q** | Drawer Sides (2) | ½ x 4½ - 18 |
| **R** | Drawer Front/Back (2) | ½ x 4½ - 26½ |
| **S** | Drawer Bottom (1) | 17½ x 26½ - ¼ Ply. |
| **T** | False Front (1) | ¾ x 5 - 27¾ |
| **U** | Top (1) | 1 x 21¾ - 35½ |

- (1) Pair 18" Full-Extension Drawer slides
- (2pr.) 2" Hinges
- (4) ¼" Shelf Pins
- (4) Drawer Knobs
- (2) Door Catches
- (6) #8 x 1¼" Panhead woodscrews w/ Washers

### UPPER CASE

| | | |
|---|---|---|
| **A** | Sides (2) | 15½ x 37¼ - ¾ Ply. |
| **B** | Dividers (3) | 14½ x 33 - ¾ Ply. |
| **C** | Small Sides (2) | 14½ x 16⅜ - ¾ Ply. |
| **D** | Small Dividers (2) | 14½ x 28½ - ¾Ply. |
| **E** | Drawer Divider (1) | 14½ x 4½ - ¾ Ply. |
| **F** | Tray Divider (1) | 14½ x 3⅛ - ¾ Ply. |
| **G** | Case Stiles (2) | ¾ x 3 - 37¼ |
| **H** | Case Rail (1) | ¾ x 2½ - 30 |
| **I** | Edging | ¾ x ¾ -155 rgh. |
| **J** | Case Shelf (1) | 13⅝ x 32⅜ - ¾ Ply. |
| **K** | Back Stiles (2) | ¾ x 3 - 37¼ |
| **L** | Back Center Stile (1) | ¾ x 3 - 28¾ |
| **M** | Back Lower Rail (1) | ¾ x 6½ - 29 |
| **N** | Back Upper Rail (1) | ¾ x 3 - 29 |
| **O** | Back Panels (2) | ½ x 13⅜ - 28¾ |
| **P** | Case Top (1) | 16½ x 35 - ¾ Ply. |
| **Q** | Roundover Molding | ¾ x ¾ - 75 rgh. |
| **R** | Cove Molding | ¾ x ¾ - 75 rgh. |
| **S** | Door Stiles (4) | ¾ x 2½ - 17⅛ |
| **T** | Door Center Stiles (2) | ¾ x 2½ - 13⅛ |
| **U** | Door Rails (4) | ¾ x 2½ - 9 13/16 |
| **V** | Door Panels (4) | ½ x 4 1/32 - 13⅛ |
| **W** | Drwr. Sides (4) | ½ x 3½ - 14 |
| **X** | Drwr. Fronts/Backs (4) | ½ x 3½ - 12⅛ |
| **Y** | Drwr. Btms. (2) | 13½ x 12⅛ - ¼ Ply. |
| **Z** | False Fronts (2) | ¾ x 3¾ - 13 13/16 |
| **AA** | Lrg. Tray Frnts./Bcks. (6) | ¾ x 2½ - 27⅞ |
| **BB** | Tray Sides (10) | ½ x 2½ - 14½ |
| **CC** | Large Tray Btms. (3) | 14 x 27¼ - ¼ Ply. |
| **DD** | Tray Fronts/Backs (4) | ¾ x 2½ - 13½ |
| **EE** | Tray Bottoms (2) | 14 x 13 - 1/4 Ply. |
| **FF** | Tray Runners (10) | ¼ x ½ - 14½ |

- (2) Pair 14" Full-Extension Drawer slides
- (2pr.) 2" Hinges
- (12) Drawer Knobs
- (2) Door Catches
- (4) ¼" Shelf Pins
- (20) #6 x ⅝" Fh Woodscrews

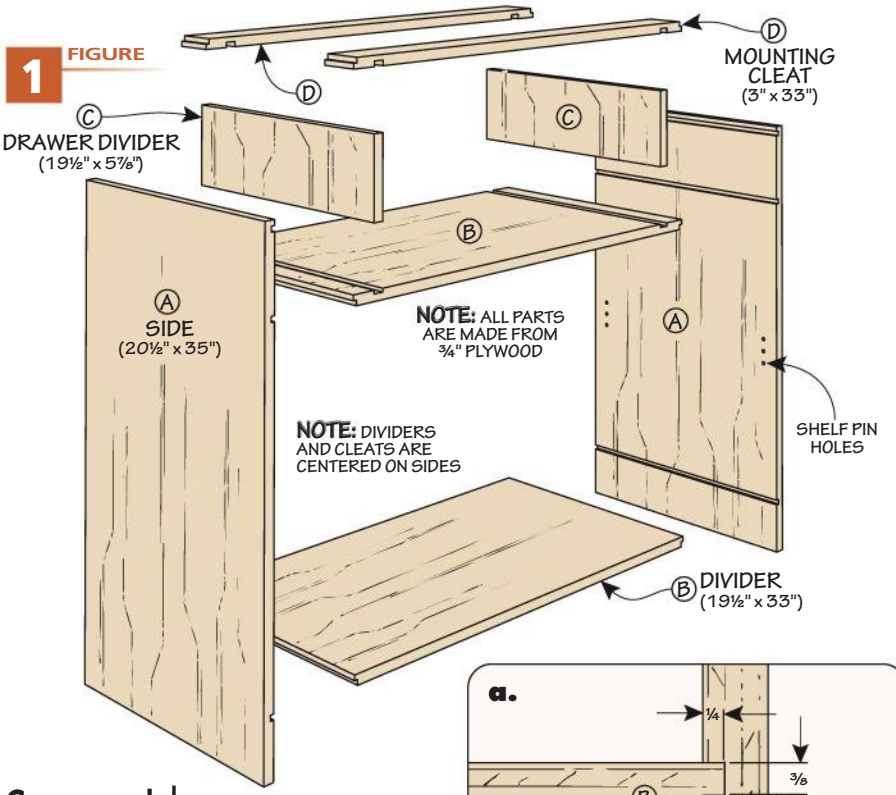


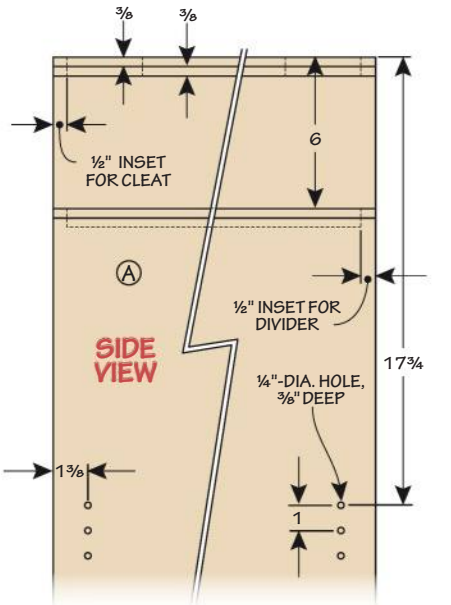


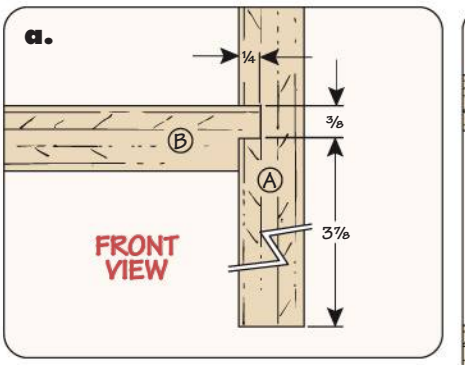


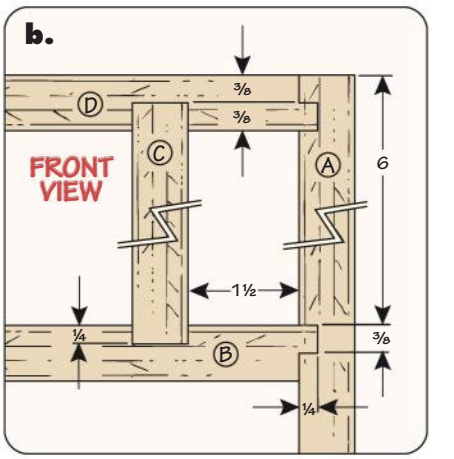


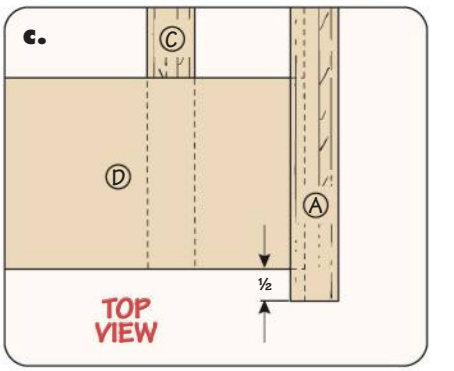


# Start with a **Solid Base**

The base of the tool cabinet provides storage for the larger tools in your arsenal. As you see in the Figure 1 above there's a large opening where an adjustable shelf will reside behind a set of doors you'll make in a little while. The cavity above that space will hold the tool cabinet's largest drawer. The building process starts at the table saw.

The bones of the base cabinet are all plywood parts. After you've wrestled the big sheets into the more manageable sizes of the sides and dividers, it's time to change out the blade for a dado set.

**DADOES.** The sides of the base have three dadoes. The lowest dado (detail 'a') holds the divider that is the bottom of the base. The upper two that you see above in the Side View are next in line. The one in the middle is for the divider that's the bottom of the drawer cavity. The upper dado is for the mounting cleats you'll use to attach the top.

There are a couple of dadoes left to do in the upper divider for the drawer dividers — detail 'b' shows their location. Also, drill the holes for the shelf pins, they're shown in the Side View.

**BASE ANATOMY.** We're at the point where we can glue up the base, so there's something I need to bring to your attention — how the front and back assemblies join to the base. If you take a gander at detail 'c' and the Side View, you'll notice that the narrower dividers are centered on the sides. This is to accommodate the rabbets that you'll cut into the stiles on the front and back assemblies. This joinery lets the front and back nestle into the body of the case, providing more glue surface.

The wide stiles — especially on the front assembly, provide extra rigidity to the overall structure. On the inside edge they're glued to the drawer dividers, creating the opening for the drawer, and a wee bit more rigidity for the base.

**DEALERS CHOICE.** So to address this challenge and make sure that the dividers are centered on the sides during glueup, you can do one of two things. You can cut some ½" shims to act as spacers when clamping up the base. Or, you can make the stiles and use them as fillers for the glueup. Either way, when you glue up the base, it's critical that the dividers are centered in the sides.

## FRONT & BACK

Moving on to the parts that will close up the case, I started with the front. As you see in Figure 2, the front is made of two stiles that are joined at the bottom with

FIGURE 2

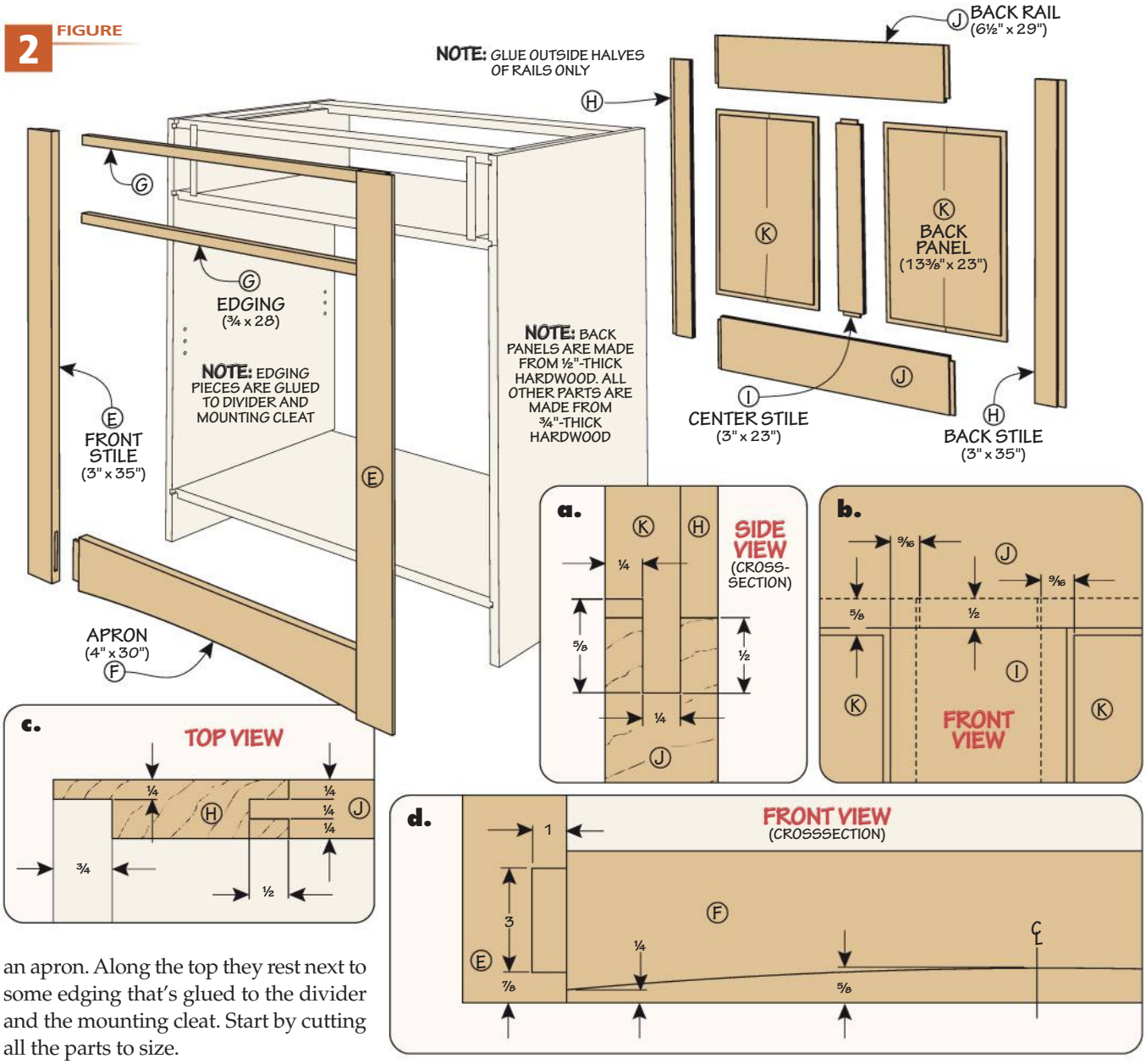


an apron. Along the top they rest next to some edging that's glued to the divider and the mounting cleat. Start by cutting all the parts to size.

**MORTISES.** Details 'c' and 'd' show the location of the mortises in the front stiles. If you have a mortising machine go for it. Otherwise get out your Forstner bit and chisel, head over to the drill press, and show us what you can do. Then cut the rabbets along the edge like you see in detail 'e.'

The apron is next. Start by cutting the tenons to join to the stiles (detail 'd'). Then shape the arc along the bottom edge (Figure 2d). For proper spacing I cut the top piece of edging to size and included it in the glueup of the front frame assembly. But don't rely on that union alone — it will last long enough to glue the front frame to the base, which you can do when the frame is dry.

Apply glue to the rabbets of the stiles and the back side of the top edging, then clamp it to the case. Also add the edging that's glued to the divider. Now you can make the back.

**FRAME & PANEL.** The back is a frame and panel assembly that gives you the visual option of placing it anywhere in the shop and looking good from all sides. Cut the centered grooves in the stiles and rails (Figures 2a and 2b). Then cut the tongues in the center stile and rails. (Don't forget those rabbets on the edge of the stiles.)

**PANELS.** The panels are glued-up hardwood rabbeted along the inside edge. Notice in Figure 2b that the vertical rabbets are wider than the horizontal versions. Later we'll visit about why the rabbets on the panels are different widths. When gluing up the back, use just a dab of glue in the center of the panels, and only the outside halves of the rails. When the back assembly is dry, you can glue it to the base.

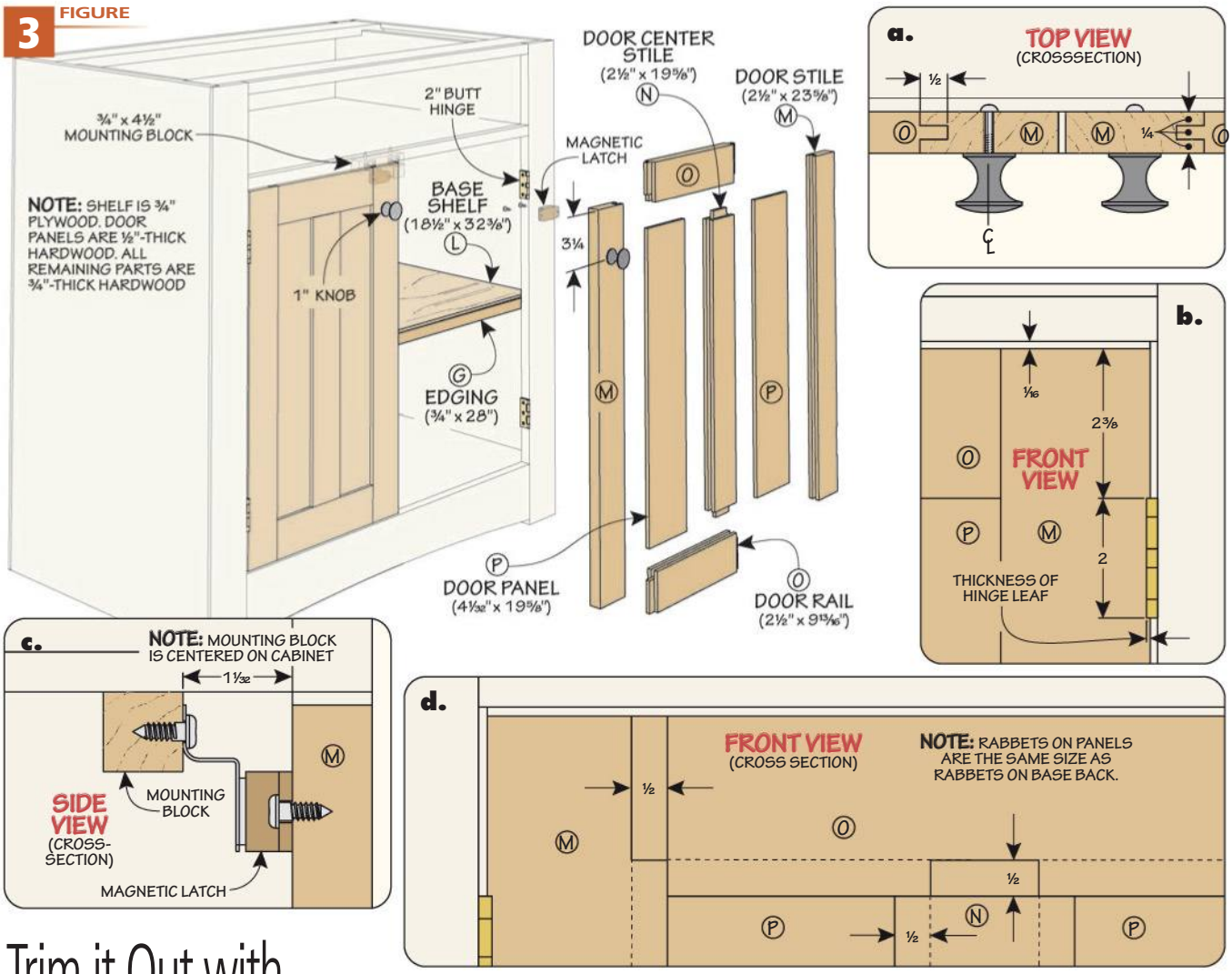


# Trim it Out with **Simple Style**

Now it's time to sub-divide and tidy up the big space that's the base cabinet. As you see in the figures on these two pages, this is all about adding a pair of doors, a big drawer, and a thicker than average top that's an appropriate crown for the base.

Let's kick off by making the shelf that lives inside the base. The front is edged with the same edging material that you used on the base front. That was easy, now let's move on to the doors.

**FRAME & PANEL DOORS.** If you take a gander at all the visual info above in Figure 3d, you'll see the joinery details for the two doors. The joinery of doors, (like the back panels on the base) make for a strong, and appealing accent to the surface of the cabinet. The shadowline created by the recessed panels that are held in the stiles and rails break up the surface in an interesting way. The process starts at the table saw by making centered grooves in the stiles and rails.

**TENONS.** The next task is cutting the tenons on the ends of the center stile and the rails. You can see both tenons in Figure 3d. After installing a dado blade in your table saw, attach a sacrificial fence to your miter gauge and use your rip fence as a stop to cut the shoulders of the tenons. Then nibble away the cheek waste by backing the workpiece away from the rip fence.

Cutting the rabbets on the panels are the last detail to be done before gluing up the doors. They are the same configuration as the rabbets you cut on the back panels earlier. When they're cut, you can clean off the appropriate worksurface and gather up the clamps and supplies to glue the doors together.

**DOOR DETAILS.** After the glue has done its work on the doors, you can focus on the details required for integrating them into the base. This starts with attaching the hinges — first to the doors (Figure 3b), then to the base cabinet.

Drilling holes for the knobs is next up. Figures 3 and 3a provide the information needed. Attaching the magnetic catch and installing the mounting block on the underside of the drawer divider is the last thing to do in this phase, Figure 3c gives you insight on what to do.

## A BIG DRAWER

Now you can turn your attention to the opening in the upper portion of base cabinet where a big drawer lives. This is the biggest drawer in the cabinet and it's meant to hold heavy stuff — if you choose to store it there. This is why

FIGURE 4

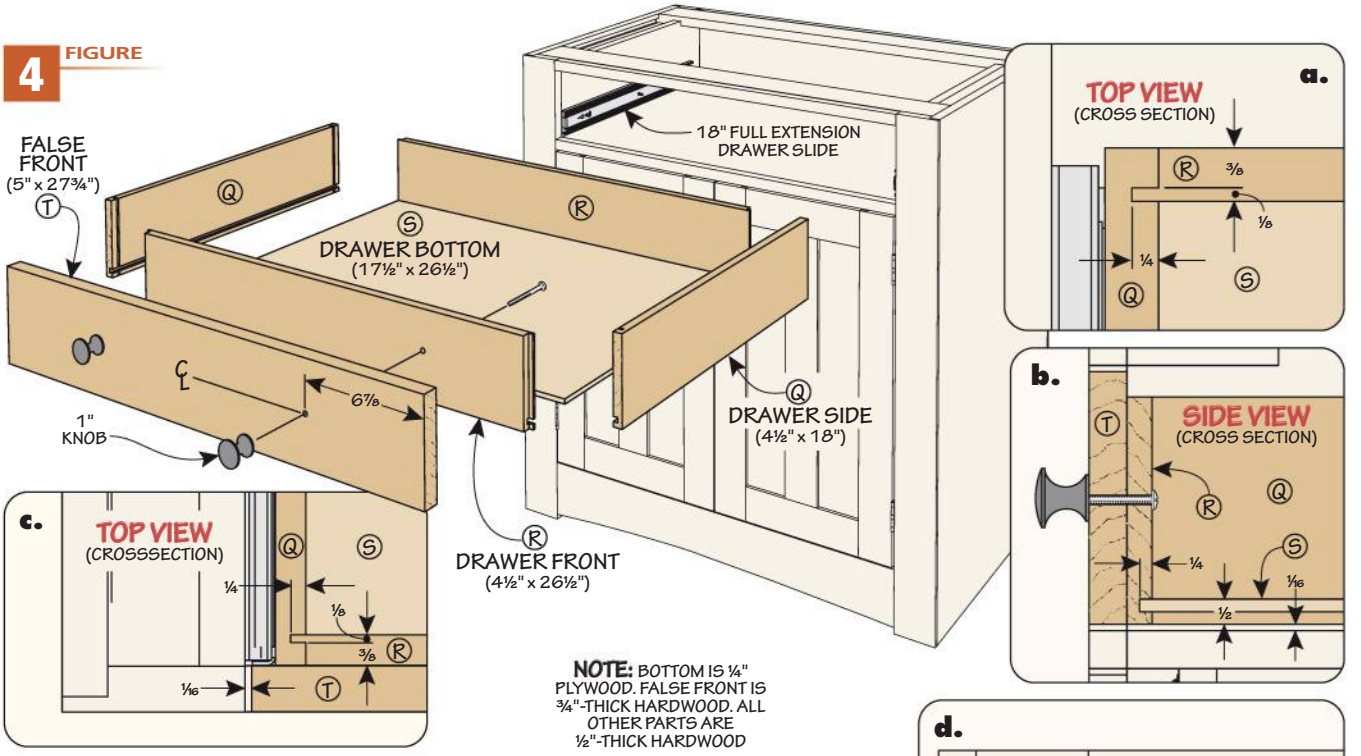


we decided to attach these to the base with full-extension drawer slides; the heavy-duty kind of slides that can take a beating. Since the slides are going to be doing most of the heavy lifting, we chose a simple, yet sturdy joint to use on the drawer box.

**TONGUE & DADO.** Figure 4a and 4c shows the joinery employed for the drawer box. After cutting all the parts to final size, you'll start the joinery process on the sides. The sides require a narrow dado cut in the ends to mate with the front and back drawer parts.

What follows this is making the rabbet on the ends of the front and back pieces (they are shown in the same details as the tongues). Lastly, before gluing up the box, cut the groove along the bottom edge of all four drawer pieces for the drawer bottom, Figures 4b and 4d shows where it's located.

**FALSE FRONT.** It's time to install the false front. The easiest method is to first install the drawer slides in the case and on the sides of the drawer box. Figure 4d shows where the set we used attaches to the cabinet and the drawer. You'll need to confirm the specifications of the hardware you have on hand.

Once the slides are in place on the cabinet and the side of the drawer box, you can slide the box in the opening (with double-sided tape on to the box front). Center the false front in the opening (Figure 4c). When you're comfortable with the spacing, press the false front firmly against the box. Now you can remove the drawer and screw the false front to the box from inside. Adding the knobs is the last bit of work to do on the drawer (Figures 4 and 4b).

**THE TOP.** Making the top is the last order of business for the cabinet base. As you see in Figure 5 below, the top is thicker than normal. We felt the top was deserving of a little more prominence so we beefed it up to 1"-thick material.

FIGURE 5

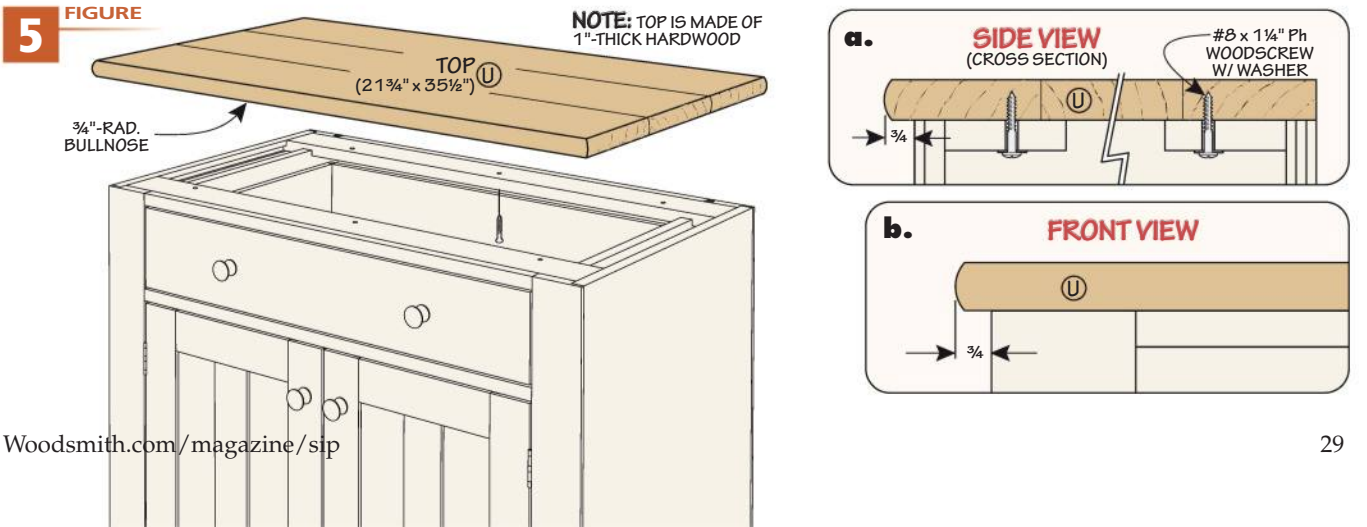

FIGURE 6

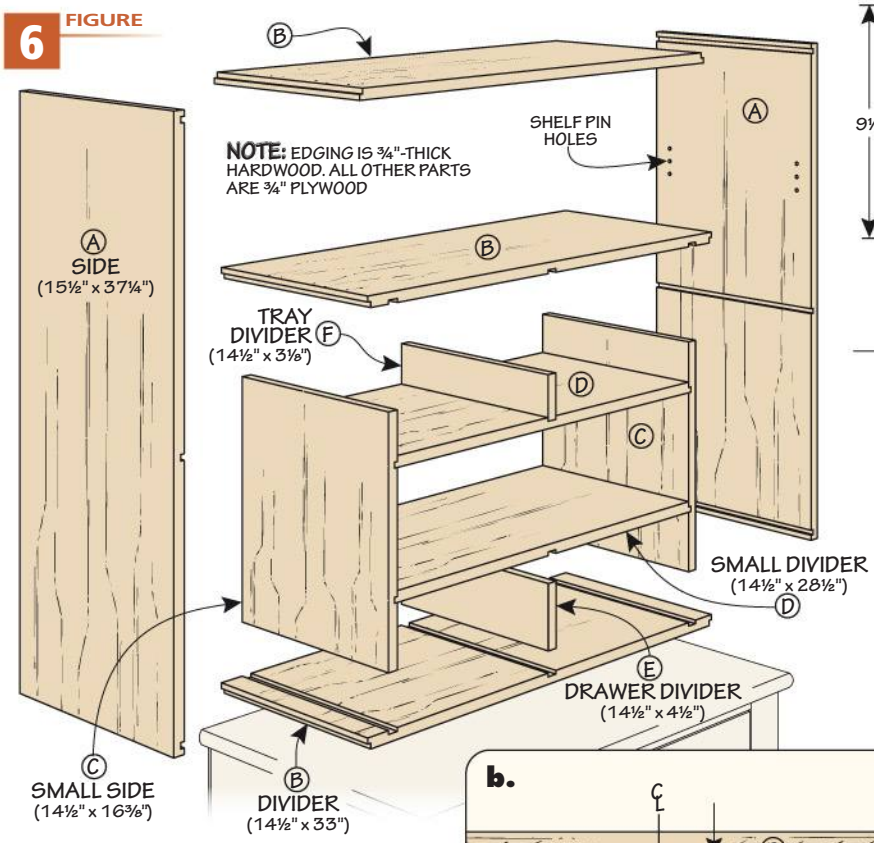


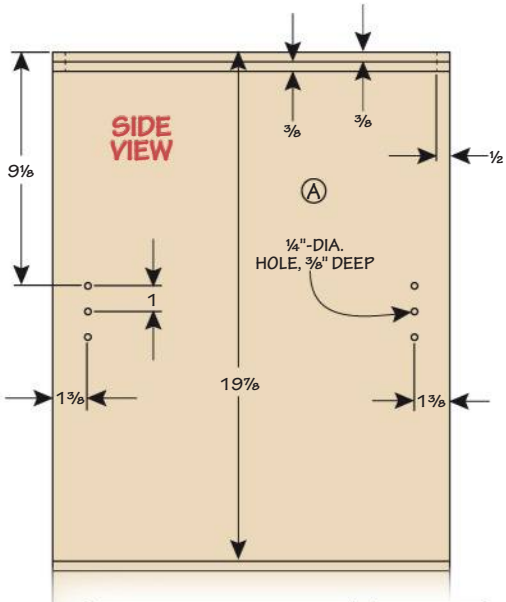


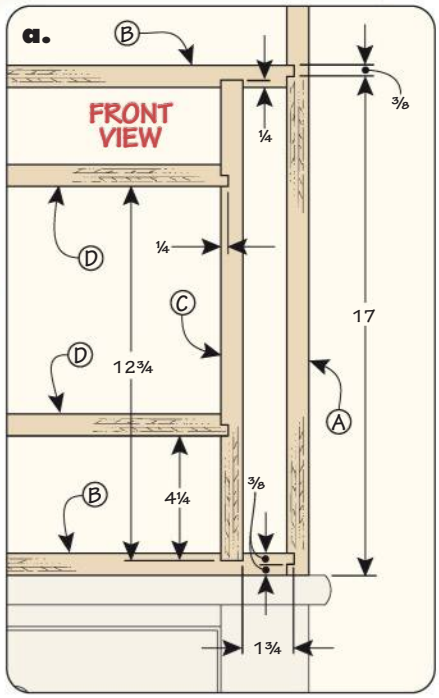


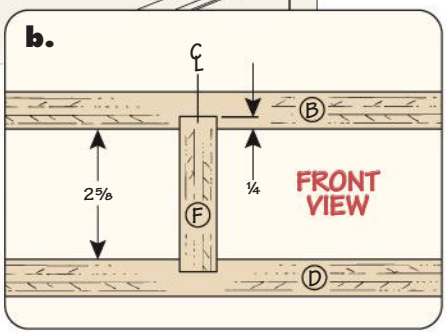


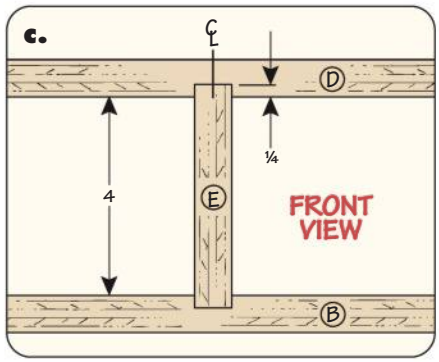


# Up Above a Sturdy Case

While the base cabinet is cooling off in the corner, you can turn your attention to what's going to live on top — the upper case that you see flowing across these pages. It starts out fairly similar to its older, larger sibling with the plywood construction you see above. But to provide storage for the variety of smaller tools you've gathered over time, the infrastructure is quite different.

You see at the bottom center of the case there's an opening for a pair of drawers that are slightly smaller than the one in the base. This is a perfect space for your mid-sized gadgets. Just above these two are five trays that will let you dial in your access to your fine hand-tool cache. Above the trays you'll have more open space for middling size items. Let's jump into the case parts.

**PLYWOOD PARTS.** Figure 6 above shows all the parts required for the body of the case. Once you've ripped and cut them to their final sizes, we'll tackle the dadoes where they're required.

All the dado locations are shown in the drawings on this page. The case sides get three for the dividers that form both the case itself and the case within the case. In esoteric woodworking circles this configuration is referred to as the "Russian doll construct," just so you know. It will either impress your friends, get you thrown out of your own shop, or leave you with being the buyer at the next happy hour.

The next set of dadoes are cut into the inside faces of the bottom and middle dividers, Figures 6 and 6a show these. There are centered dadoes that need to be cut in the small dividers, Figures 6b and 6c show them in detail. Now that all the dadoes are done, you can focus on the mating tongues. All of them are on the ends of the dividers of both cases.

Drilling the shelf pin holes are a detail that's more easily done before the case is glued up — so do that. Speaking of keeping things easy, we'll tackle the glueup of the case in a couple of stages.

**TWO-STAGE GLUEUP.** For me, keeping things simple means gluing up the

nested section of the case first (the section that holds the drawers and trays) then the case sides and top divider. As a reminder, this case, like the base before, has dividers that are narrower than the case sides to allow for the rabbeted front and back assemblies.

So all the parts involved in the first glueup are flush to each other. It's when you bring in the wider case sides that you'll need to consider using shims to center the top divider and the glued up drawer/tray assembly. Then it's on to making the front and back of the case.

## FRONT & BACK

The front and back of the case are similar to the ones that adorn the base, but not exactly alike. On the front, the location of the joined rail is at the top, whereas the apron is on the bottom of the base. And the back rails on this case are two different sizes, not uniform widths like the base back. That being noted, cut all the parts for the front to size.

**MORTISE & RABBETS.** The marching orders are the same for the mortise in the top of the stiles. After drilling the holes at the drill press, square them up with a chisel (Figure 7c and 7d). Next, it's a trip to the table saw to rabbet the edges as shown in Figure 7c. Then change the setup at the saw and cut the tenons on the rail (Figure 7c and 7d).

Gluing up the front presents the same challenges as before. You can temporarily clamp the bottom edging piece in place while the glue dries.

**THE BACK.** The back is a rinse and repeat of the previous panels. Cut the grooves in the stiles and rails, then rabbet the stiles. Cut the tenons on the center stile and the rails. Then cut the rabbets on the panels (Figure 7a and 7b). Glue up the back now, but don't install it until the tray runners are in place.

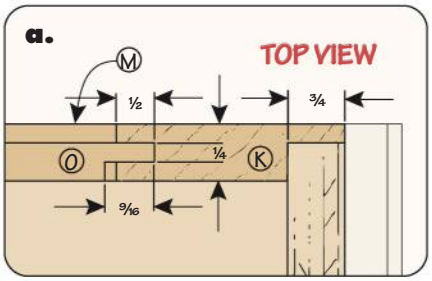


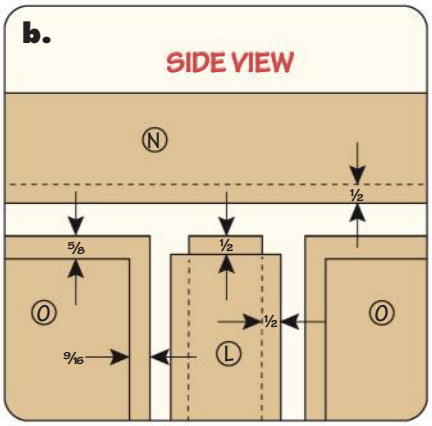


**7** FIGURE

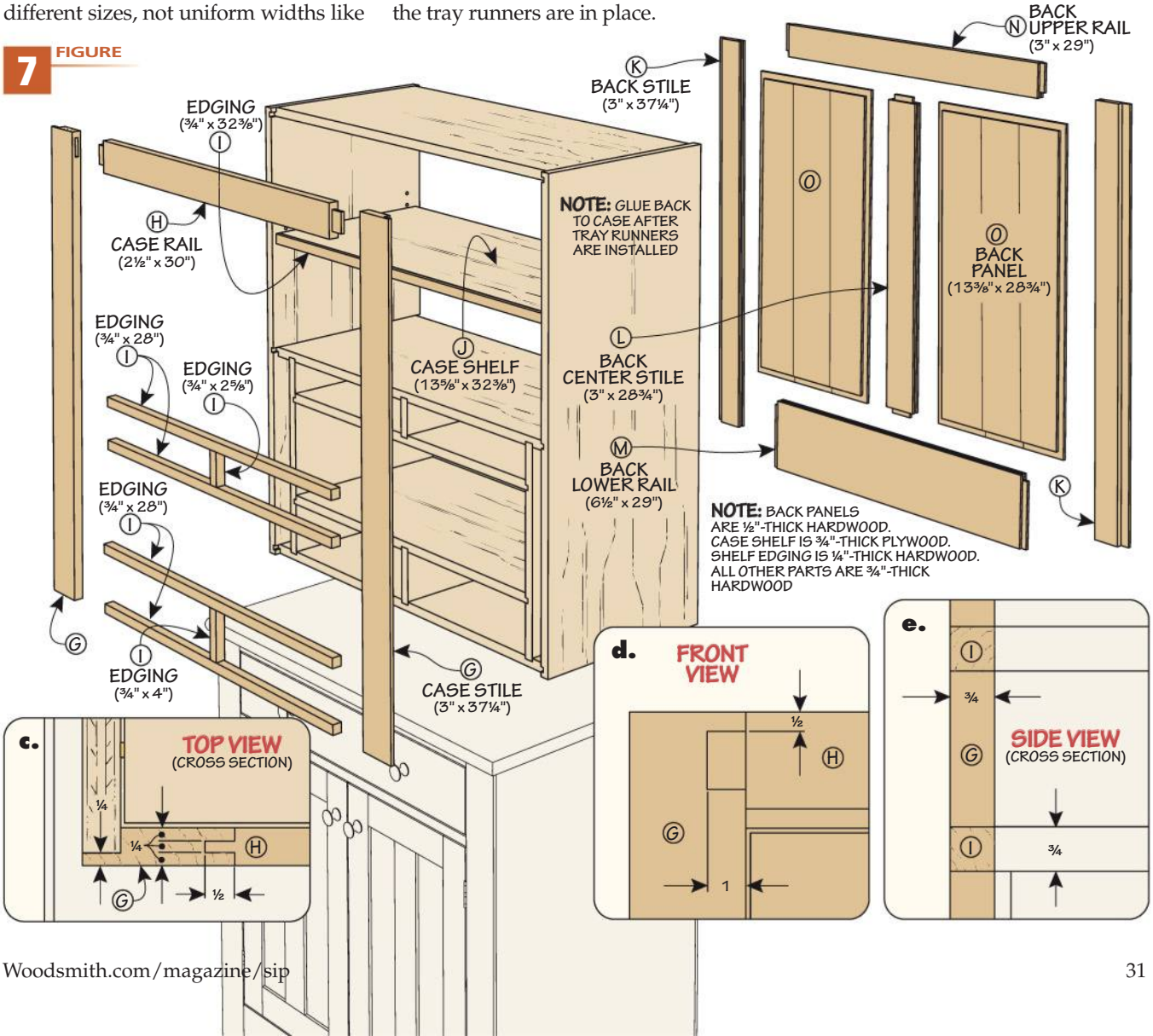

FIGURE 8

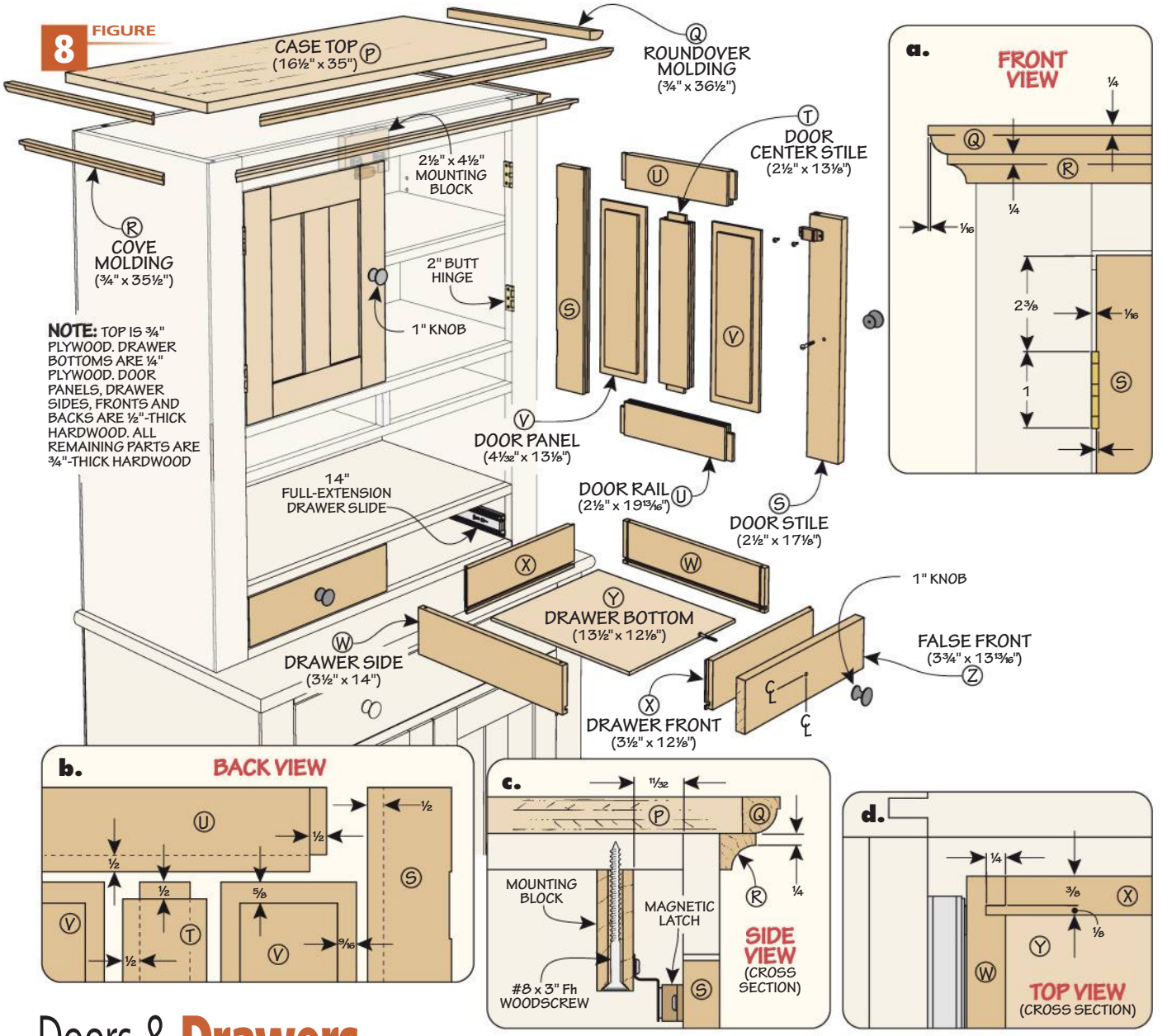


# Doors & Drawers

To complete this fine project it's déjà vu all over again. You've got doors, drawers, and a top to contend with. The top this time is plywood wrapped with two moldings to give the case a counterpoint to the arc in the bottom of the base. The top is the last bit of work glued to the case: I chose to start there.

**THE TOP.** After spending a few moments at the table saw you'll have the plywood blank needed for the top. The top is wrapped with a piece of molding you can make with a ½" roundover bit (Figure 8a). It's easily made on a length of hardwood at the router table, then mitered and glued to the plywood blank. Underneath the top we've added a simple cove molding (Figure 8a and 8c). This is a piece of molding that you can buy if you like, or make it. The top is glued in place on the case.

**MORE DOORS.** The doors on the case are smaller than the ones you made for the base, but beyond that, they're structurally the same. I would like to visit a moment about an element of the doors I haven't touched on to this point — the rabbeted panels. Since you've already made these panels and see how they fit in the frames this might not be news to you, but there are reasons behind the fact that the rabbets are two different widths. First, the narrow rabbets on

the sides (Figure 8b) allow for seasonal movement of the hardwood panel. Second, the wider rabbets on the top and bottom makes for an interesting look on the inside of the cabinets. There's no reason not make the whole project look good inside and out.

So now you can proceed to making the doors and attaching them to the case in the same way you did on the base. Notice in Figure 8c that the mounting block for the magnetic catch is larger to accommodate the wider rail.

**THE DRAWERS.** The drawers here are modest in size compared to the one in the base. But they're just as sturdy and well-connected to the case. The full-extension drawer slides used here are a little shorter, but just as strong (Figures 8 and 8f). Again, read and follow the instructions that come with your slides. As you see in Figures 8d, 8e, and 8f, the joinery for these two drawers is the same as their big brother.

## TRAYS

Here's where we've upped the ante on this tool cabinet. I'm talking about the trays you see in Figure 9. The addition of these five trays expands the use of the tool cabinet beyond merely a place to store tools. As you see in Figure 9, the grooves in their sides ride in and out of the case on hardwood runners that are attached to the inside of the case.

**NEW JOINERY.** This detail lets you easily bring any of the trays with tools of your choice to the place you're working. Pretty slick indeed. Since there's no hardware to contend with, the joinery used here is ideal for these on-the-go trays — locking rabbets. Often this joint is only applied on the front of a drawer (Figure 9a), and a tongue and dado is used on the back end. But since the drawer box will be seen in its entirety, we repeated the joint on the back side as well. After cutting all the pieces to size, the journey starts at the table saw with the front pieces.

**THE STEPS.** You have to stand the workpiece vertically to make a groove along the end. To do this safely you'll need a zero-clearance insert and a square backer board to hold the workpiece safely against the fence. Take your time doing this cut on all the ends of the fronts and backs, as this is the toughest part of the process.

Cut the rabbeted tongue on the ends to complete these parts. As for the sides, cut the mating dadoes in the ends of the boards (Figure 9a). Then cut the grooves for the plywood bottom in all the parts, then the wider grooves in the sides (Figure 9c). After cutting the bottoms to size, glue up the trays. While they're drying you can make the runners and install them in the case (Figure 9b). When you've slid the last tray in place you've got one nice cabinet on your hands.

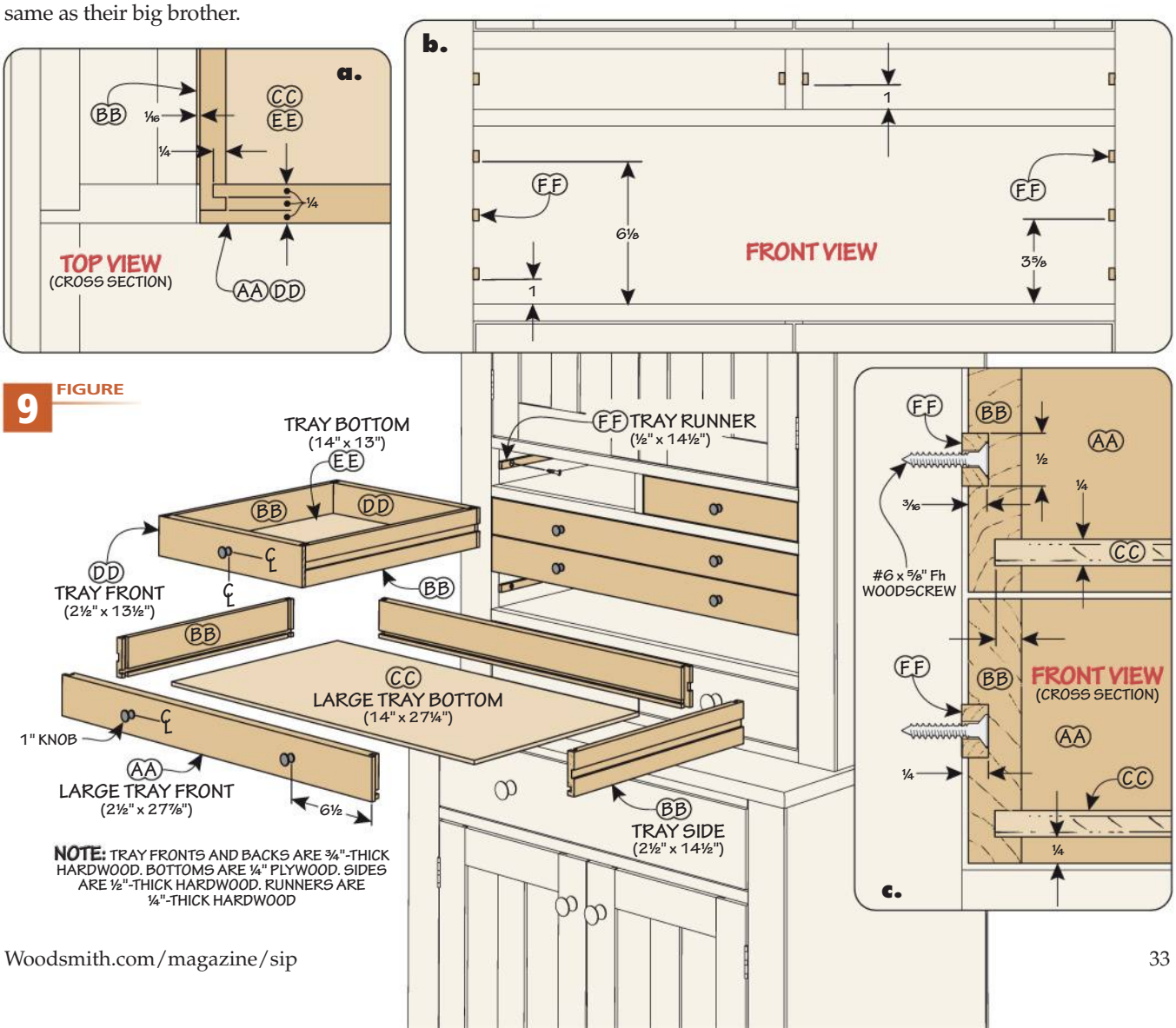


FIGURE 9

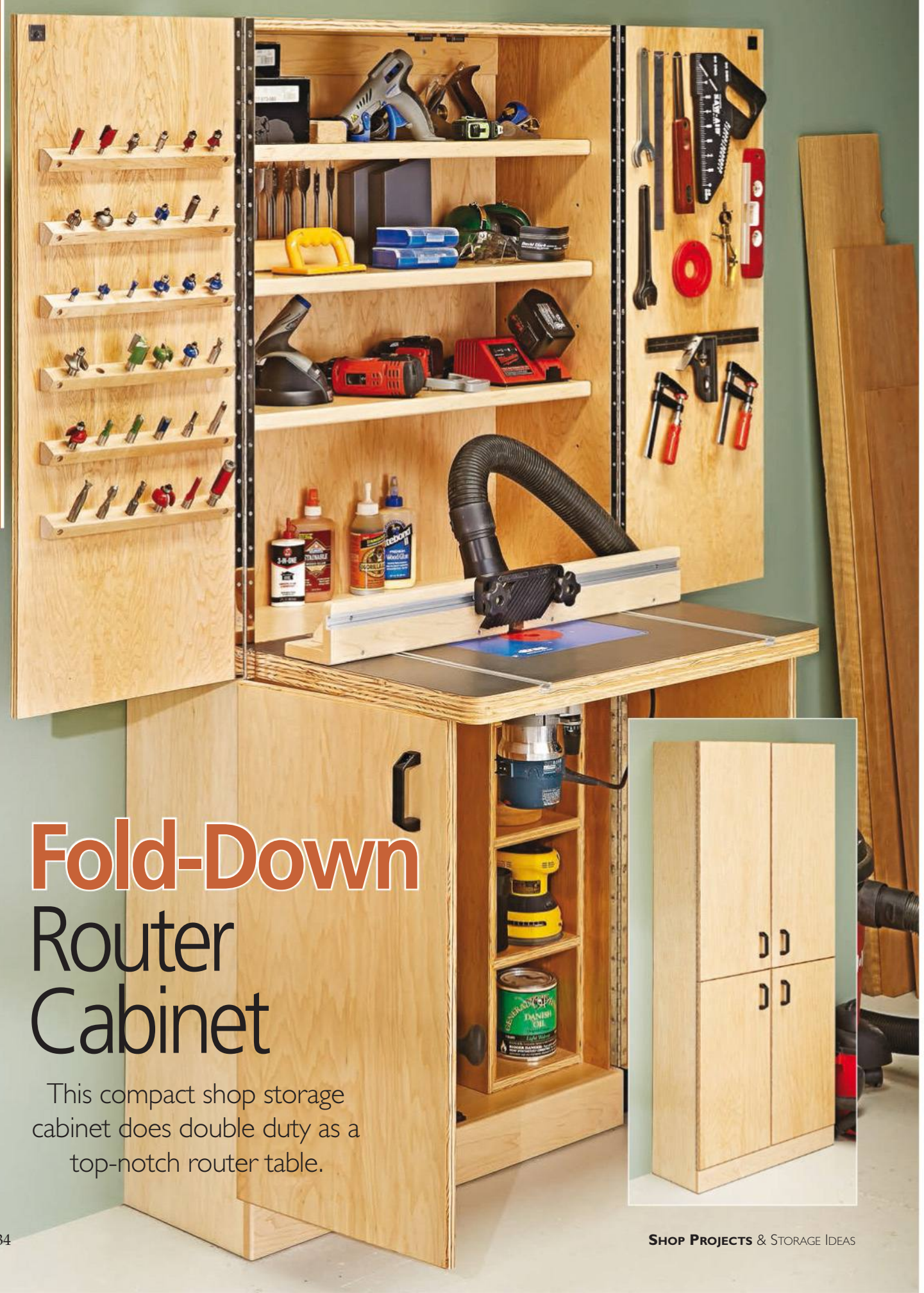

# Fold-Down Router Cabinet

This compact shop storage cabinet does double duty as a top-notch router table.

# Construction Details

**OVERALL DIMENSIONS:**
32" W x 72" H x 13½" D

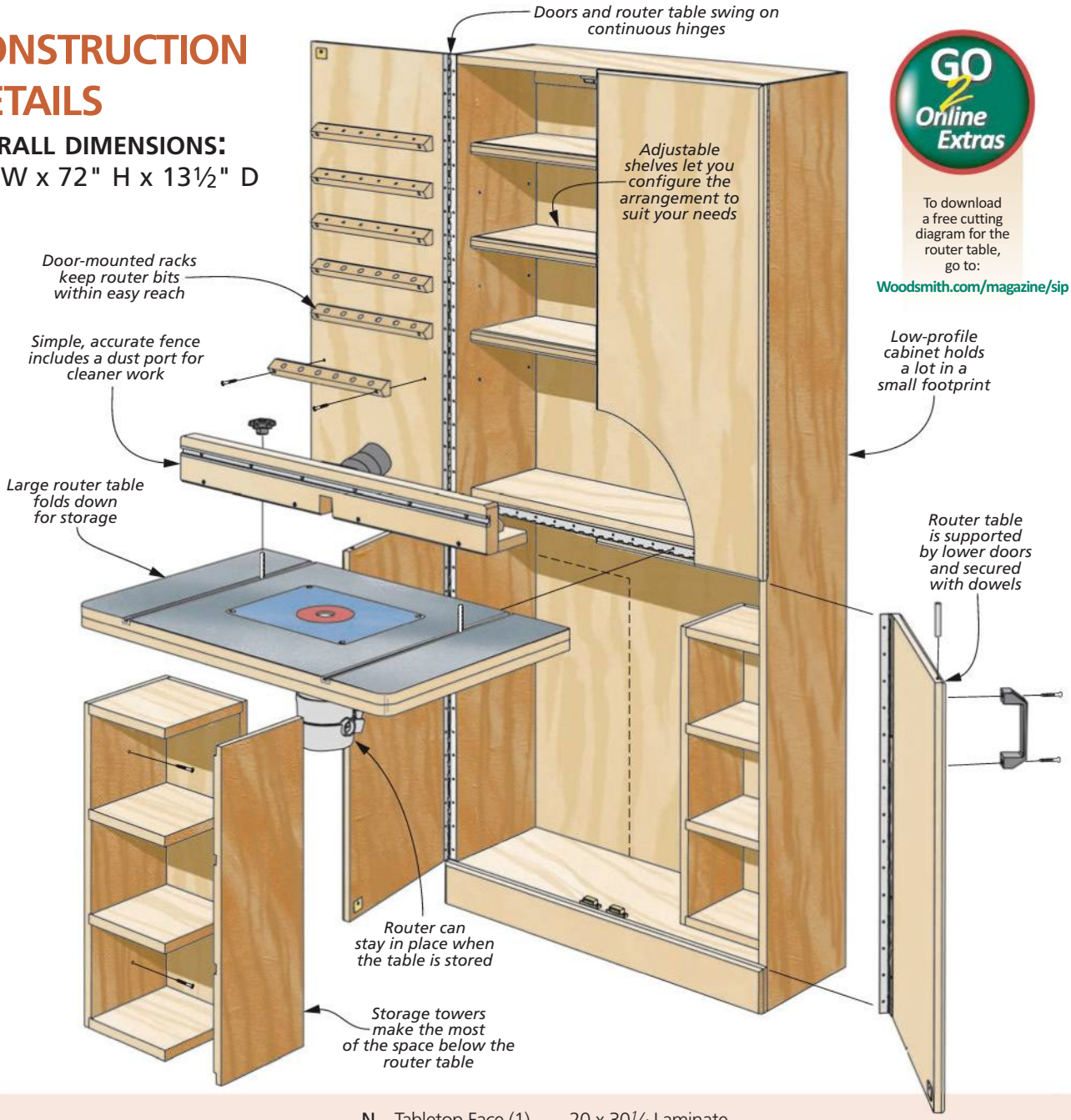


GO 2 Online Extras

To download a free cutting diagram for the router table, go to:
Woodsmith.com/magazine/sip

## MATERIALS & SUPPLIES

| | | |
|---|---|---|
| A | Sides (2) | 11¼ x 72 - ¾ Ply. |
| B | Top/Bottom (2) | 11¼ x 31 - ¾ Ply. |
| C | Divider (1) | 9⅜ x 31 - 1½ Ply. |
| D | Mounting Cleat (1) | ¾ x 2½ - 31 |
| E | Upper Back (1) | 31 x 34¼ - ¼ Ply. |
| F | Lower Back (1) | 31 x 30½ - ¼ Ply. |
| G | Toe Kick (1) | ¾ x 3½ - 32 |
| H | Shelves (3) | 8¼ x 30 5/16 - ¾ Ply. |
| I | Edging (3) | ¾ x 1 - 30 5/16 |
| J | Tower Sides (4) | 8½ x 24 - ¾ Ply. |
| K | Tower Backs (2) | 8 x 24 - ¾ Ply. |
| L | Tower Dividers (8) | 8 x 8 - ¾ Ply. |
| M | Tabletop (1) | 20 x 30¼ - 1½ Ply. |
| N | Tabletop Face (1) | 20 x 30¼ Laminate |
| O | Fence Base (1) | ¾ x 3½ - 30 |
| P | Fence Face (1) | 1 x 3½ - 30 |
| Q | Braces (2) | ¾ x 2½ - 2½ |
| R | Dust Port Blocks (2) | ¾ x 2¾ - 2⅞ |
| S | Upper Doors (2) | 15 15/16 x 38⅜ - ¾ Ply. |
| T | Lower Doors (2) | 15 15/16 x 29⅞ - ¾ Ply. |
| U | Bit Racks (6) | 1¼ x 1 3/16 - 13 |

- (12) ¼" L-Shaped Shelf Supports
- (2) 24" T-Tracks
- (16) #6 x ½" Fh Woodscrews
- (1) 1½" X 36" Continuous Hinge
- (168) #6 x ¾" Fh Woodscrews
- (1) Kreg Router Table Insert Plate
- (1 set) Insert Plate Levelers
- (2) 5/16" x 1½" Dowels
- (12) #8 x 1¼" Fh Woodscrews
- (4) #8 x 1½" Fh Woodscrews
- (4) #8 x 2" Fh Woodscrews
- (1) 36" T-Track
- (1) Universal Dust Port
- (4) #6 x ½" Rh Woodscrews
- (2) 5/16"-18 x 1½" Flange Bolts
- (2) 5/16"-18 Star Knobs
- (2) 5/16" Flat Washers
- (2) 1½" X 72" Continuous Hinges
- (4) 4" Door Handles
- (4) Magnetic Catches w/Screws
- (8) #8 x 1" Rh Woodscrews

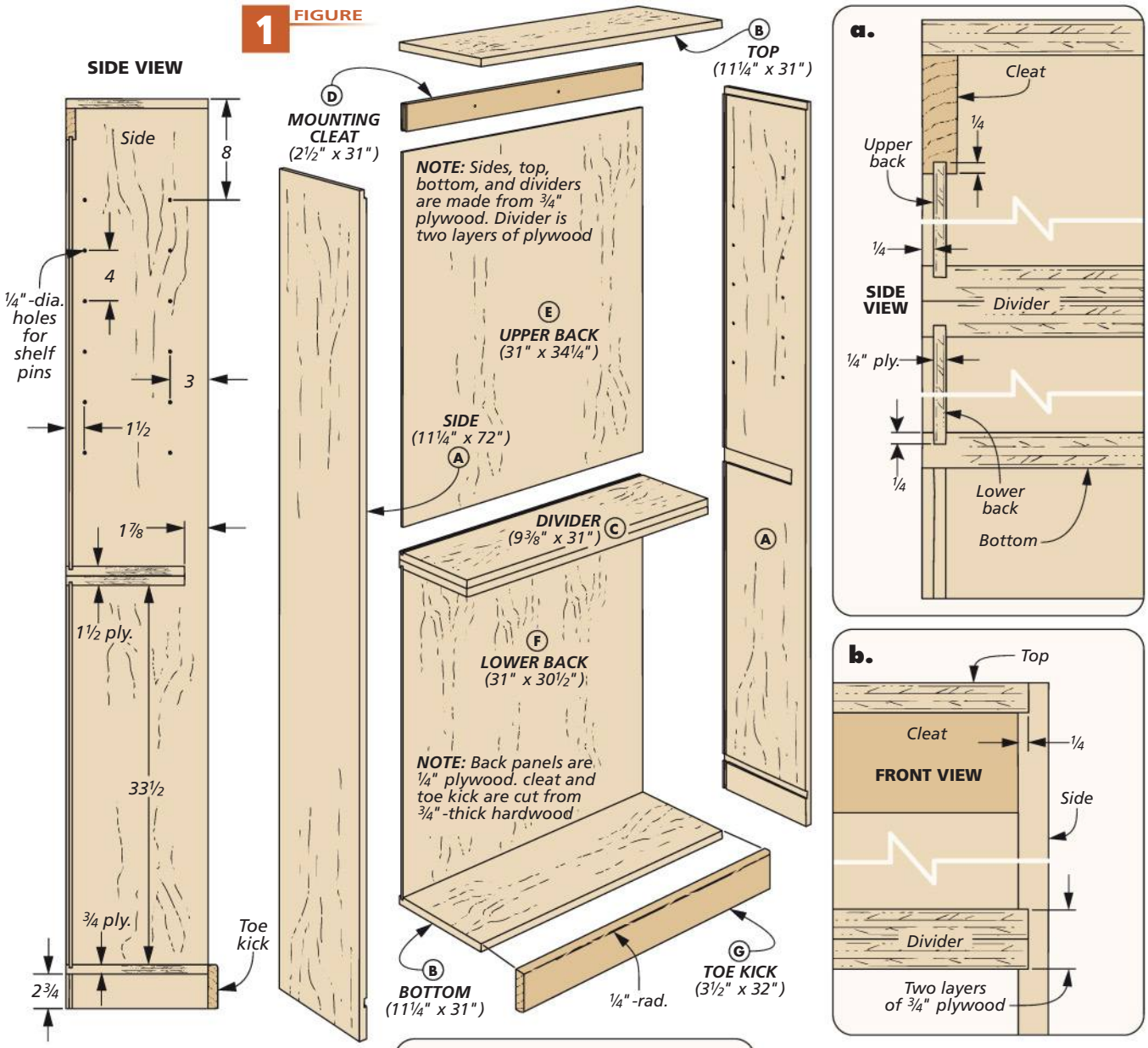


# Low-Profile **Case**

A project that serves more than one workshop need is sure to get my attention. With storage and a built-in router table, this cabinet checks two critical items off my list. Here's the kicker: It takes up less than three square feet.

The secret behind the small footprint is that the router table is like a workshop Murphy bed — it folds out when you need it and tucks away when you don't.

**STILL NOT CONVINCED?** Plywood construction and straightforward joinery mean this project can be put to use after a long weekend's worth of work.

**BIG PARTS.** One of the few challenges of building this cabinet is cutting the large sides to size. A good approach is to use a circular saw to cut more manageable (but still oversized) blanks from a sheet of plywood. Just be sure to leave a straight factory edge on each blank for later. Over at the table saw, you can cut these pieces to their final sizes without much trouble.

**SOLID JOINERY.** The table saw works fine for cutting parts to size, but for cutting the joinery, it isn't always the best option. I avoided wrestling with the parts by cutting the rabbet and dadoes for the top, bottom, and divider with a hand-held router.

A straightedge guide clamped to the parts guides the router for accurate cuts. The Side View drawing in the left margin has all the details. Take note that the wide dado for the divider is stopped. I used a chisel to square up the end after routing.

The other joinery step is cutting a groove along the rear edge to accept the back. This works well at the table saw.

The key is sizing the groove to match the thickness of the ¼" plywood.

**TOP, BOTTOM, & DIVIDER.** The sides are joined by the top, bottom, and divider. Figure 1a shows that the divider is made up of two layers of plywood. This creates a rigid mounting surface for the router table. There are grooves on the upper and lower faces for the back panels.

The bottom has a groove cut in it, as well. But the top doesn't. The reason is that I added a hardwood cleat at the top to secure the cabinet to the wall. This way, the cabinet won't tip while you're using the router table.

There's a groove on the lower edge of the cleat, and a stub tenon cut on each end that slips into the grooves in the sides, as illustrated in Figure 1c. The cleat is glued to the lower edge of the top.

**ASSEMBLY.** You only need to cut the back panels to size before you're ready to assemble the case. To do this, lay one of the sides down on your bench. Next, add the bottom, divider, and top assembly. This will create two pockets to slip the backs into place. Follow the same method with the other side, then you'll be ready to apply the clamps. As you put on the squeeze, check that the case is square. I ended up waiting until the case was dry before adding the toe kick at the bottom (Figure 1).

**ADD SOME STORAGE.** Inside the cabinet, three adjustable plywood shelves fit on supports in the upper portion. Wide hardwood edging provides extra stiffness, as in Figure 2a.

The lower part of the case holds two storage towers. The space between them is for the router when the table is stored. The towers are made from plywood and joined with dadoes and rabbets (Figures 2c and 2d).

**2 FIGURE**

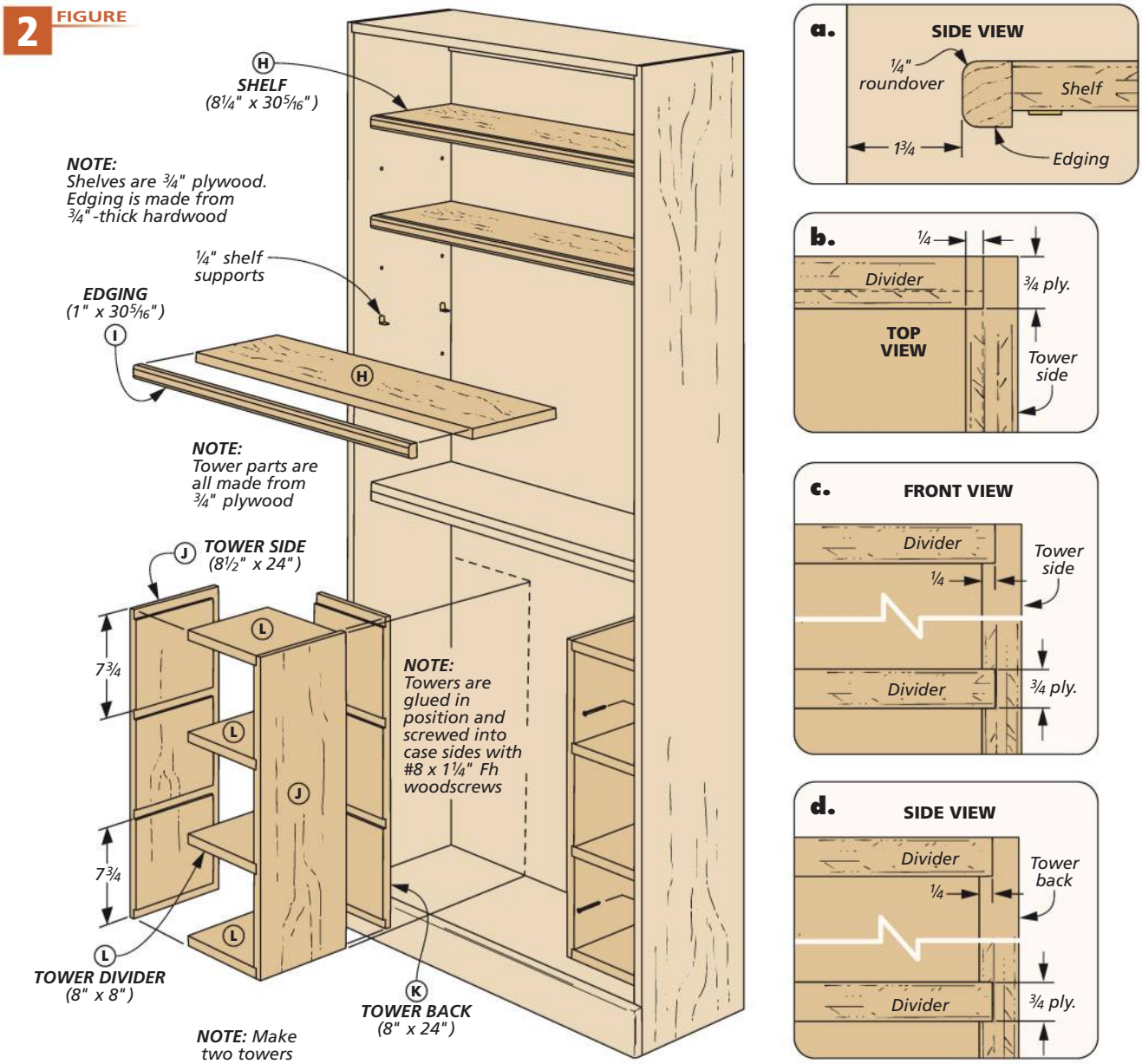

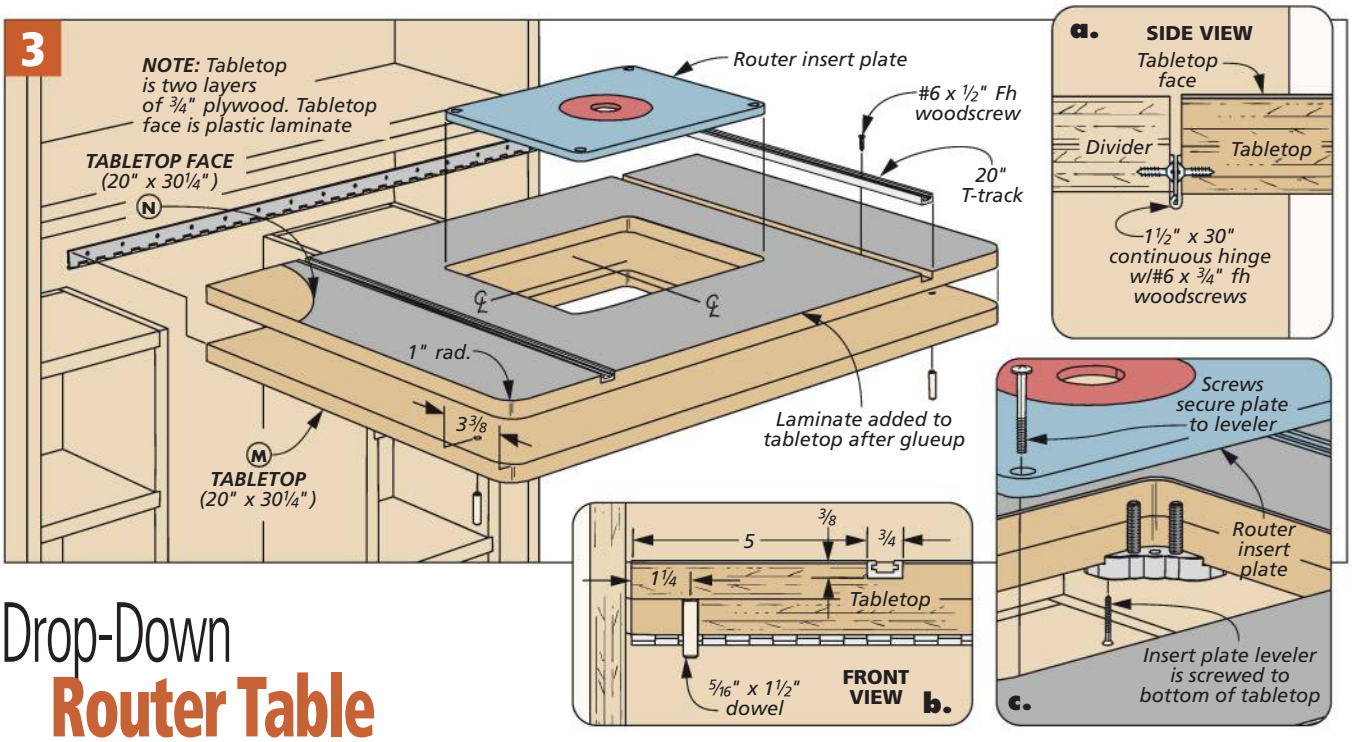


# Drop-Down Router Table

The work you've done up to now has dealt with the storage component of this project. From here on, the bulk of your efforts will be directed to the router table. This involves making the table and fence. You'll wrap it up by adding doors and a few handy bit racks.

**TABLETOP.** The router table is designed to fold down into the cabinet for storage. The tabletop is attached to the thick divider with a continuous hinge at the back. In front, it's supported by the lower cabinet doors.

The construction of the tabletop is shown in Figure 3. Two layers of plywood are glued together. I also applied plastic laminate to the top face. This gives the top a smooth, durable worksurface.

A pair of T-tracks recessed in the top allow you to attach the fence or other accessories. What's important here is that the dadoes for the tracks match the thickness of the T-track or are slightly deeper (Figure 3b). You don't want a workpiece to catch on the track in use.

**INSERT PLATE.** The router is mounted to a phenolic insert plate. But I didn't want

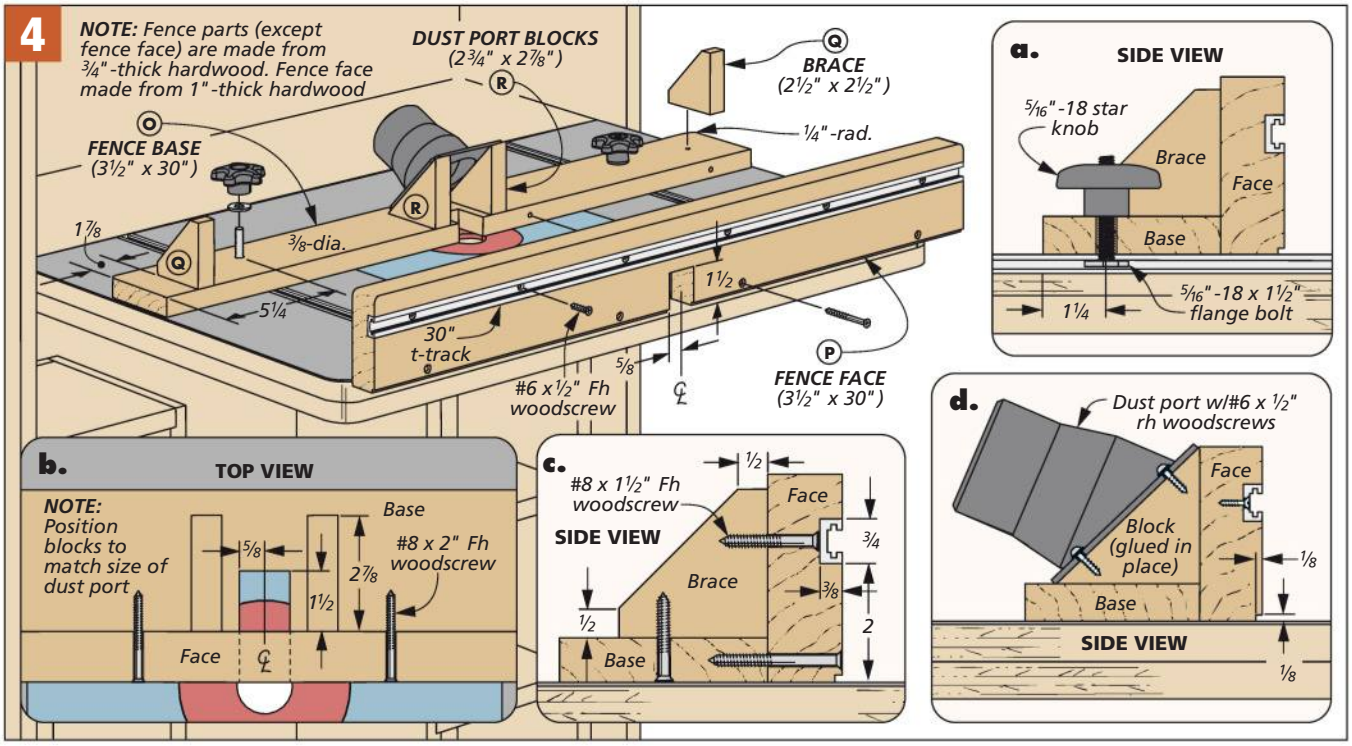

the plate to tip out of its opening in storage. So I used an insert plate and leveler system that allows the insert plate to be screwed in place, as you can see in Figure 3c.

Making the opening isn't difficult. Start by tracing the insert plate on the tabletop. Then drill a starter hole and cut out the waste with a jig saw. Take your time and cut as close to the line as you can. Use the plate as a gauge for sanding and smoothing the edge. Aim for a nice slip fit without any play.

There's one final detail on the tabletop that's easy to overlook. A couple dowels are installed in the bottom face (Figures 3 and 3b). These are used to lock the tabletop to the lower doors for use.

**NO-NONSENSE FENCE.** A good fence is essential for accurate cuts. That doesn't mean it needs to be complicated, though. The design in Figure 4 gets the job done with a few extras to boot.

The first is a T-track installed in the fence face. This is shown in Figure 4c. It's a versatile anchoring point for attaching featherboards, stop blocks, or bit covers.

The other add-on is a dust port, as in Figures 4b and 4d. This keeps dust and chips from blowing into the cabinet when you're using the router table.

The fence is an L-shaped assembly made from hardwood. A pair of braces near the ends adds stiffness to the face and keep it square, as in Figure 4c. Triangular blocks in the middle do the same and provide a mounting surface for the dust port.

**THE DOORS.** The four doors for the cabinet do more than just keep everything looking tidy when you're not working. The upper doors can actually be put to use for more storage. And as I mentioned earlier, the lower doors support the router table.

The doors are about as no-fuss as you can get, as shown in Figure 5. They're simple plywood panels with a roundover to soften the outside edges. The doors are hung on continuous hinges for added strength. Magnetic catches keep them closed.

**BIT RACKS.** You can't do much with a router without bits. To keep your collection close at hand, check out the angled racks that are shown in Figures 5 and 5c above.

**TABLE SUPPORT.** The only thing left to do is to drill a hole in the top edge of each lower door. It needs to line up with the dowels in the underside of the table, as shown in Figure 6.

Once you set the cabinet in place, it's important to attach it securely to the wall. Then you can load it up. And I'm sure this workstation will become a focal point of your shop.

5

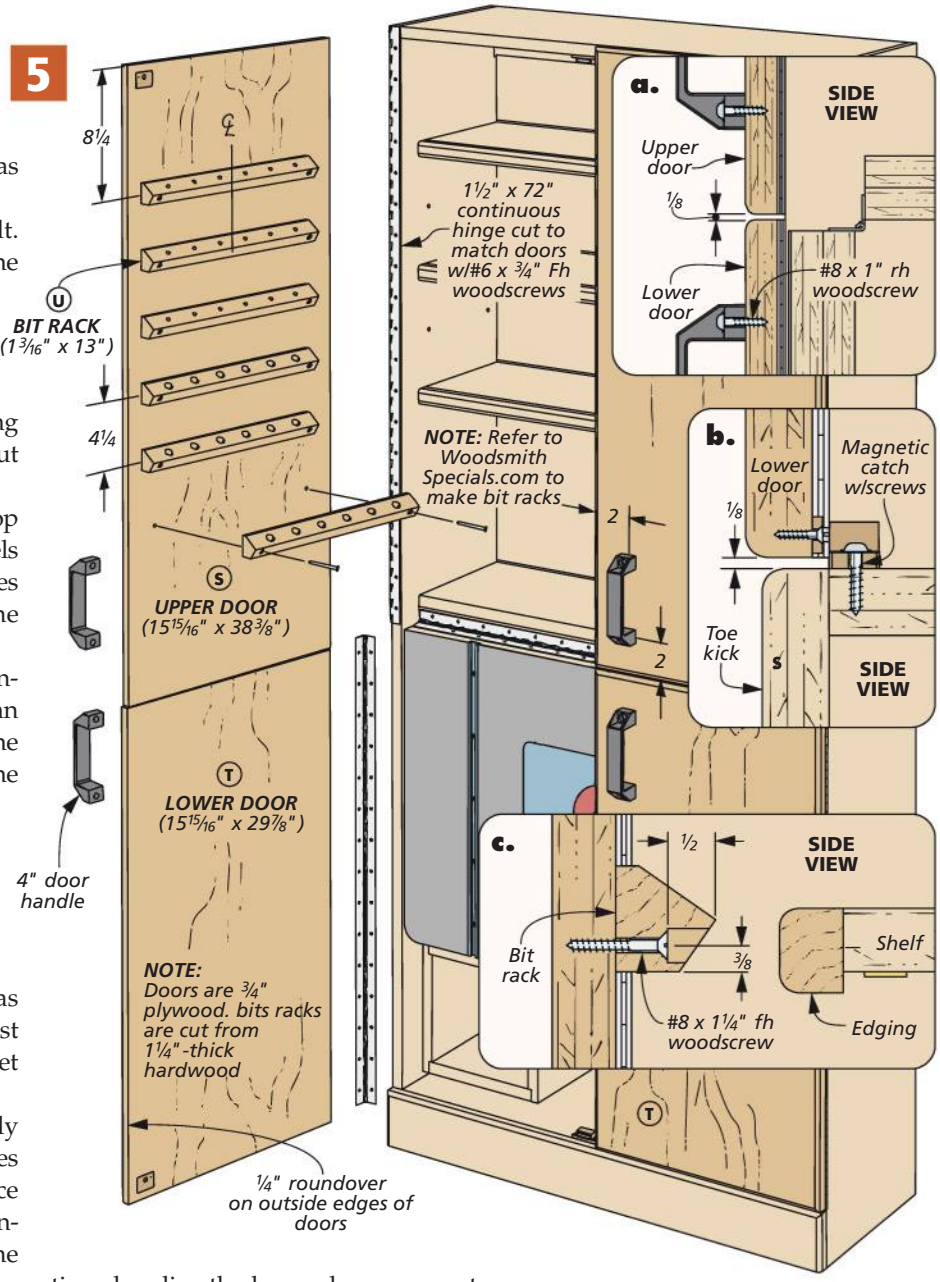


6

SPAX
8 x 3/4

# Best Chests

There's a number of reasons to appreciate a good tool chest. Storage and organization are always welcome, and these aesthetically striking chests can offer both whether they're under your bench or on it.


HIGH-TECH TOOL CHEST.....42

TRADITIONAL TOOL CHEST.....50

HEIRLOOM TOOL CHEST.....60

# High-Tech Tool Chest

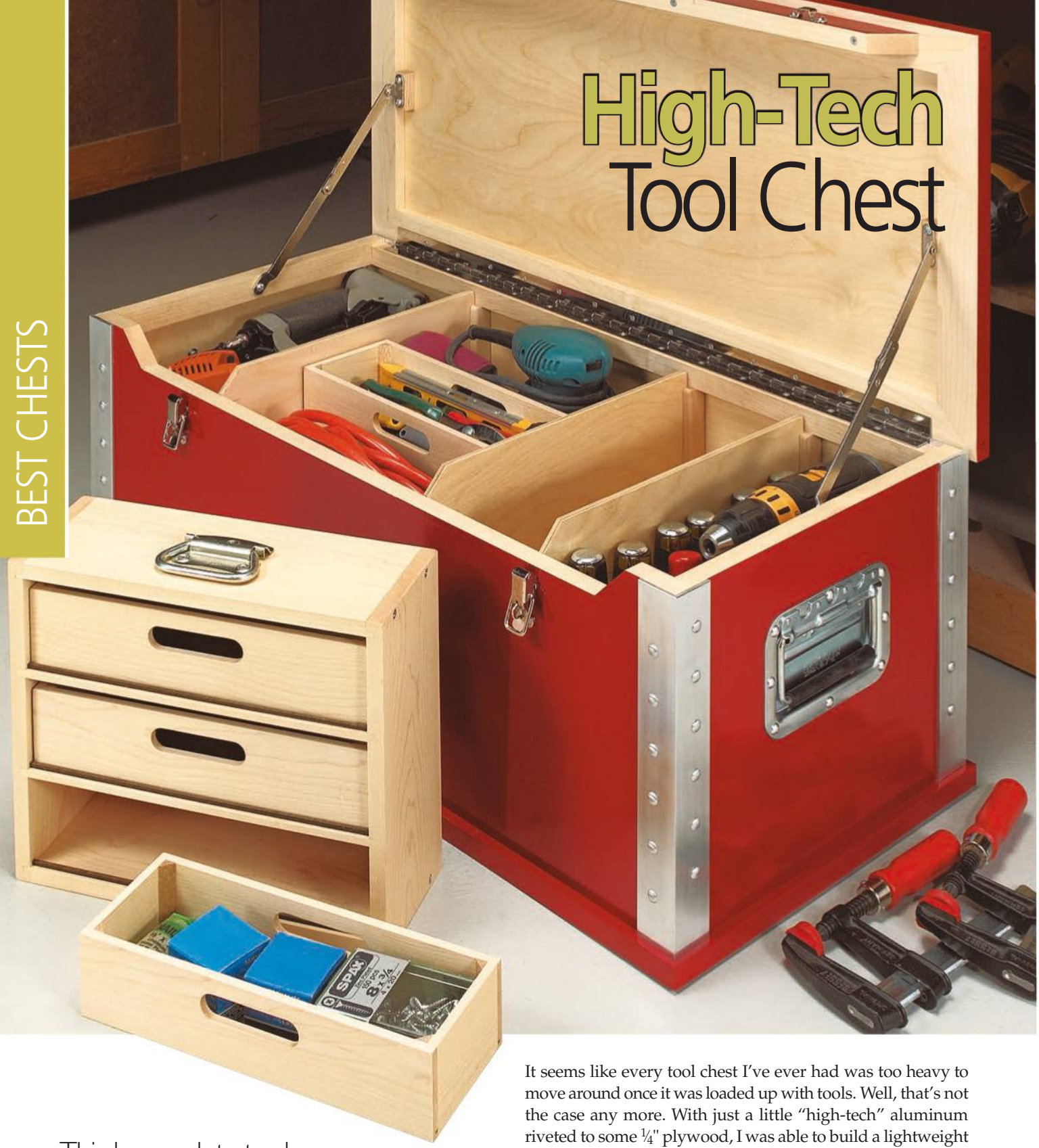

This heavy-duty tool chest has lots of handy storage and great organization — with an easy-to-build, lightweight design.

It seems like every tool chest I've ever had was too heavy to move around once it was loaded up with tools. Well, that's not the case any more. With just a little "high-tech" aluminum riveted to some ¼" plywood, I was able to build a lightweight chest that was portable and heavy-duty.

Then, to keep everything organized, I added removeable dividers, a sliding tray, and a pull-out bin. There's even a small rack inside to provide quick access to often-used tools. And you can arrange these accessories any way you want to suit your needs. You'll find all the details for this on page 48.

# Construction Details

**OVERALL DIMENSIONS:**
14¾"D x 31¼"W x 12 7/16"H

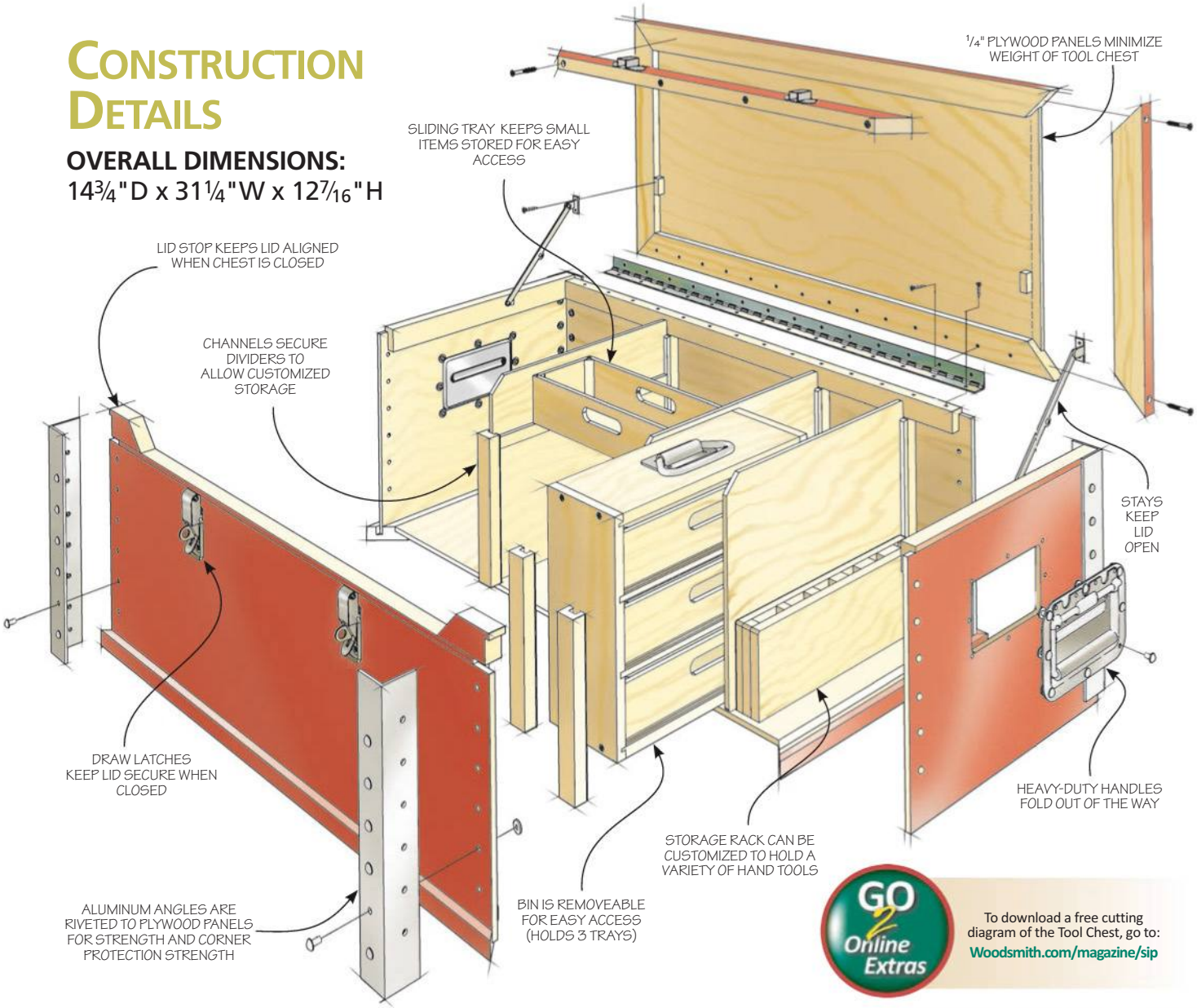


GO 2 Online Extras

To download a free cutting diagram of the Tool Chest, go to:
**Woodsmith.com/magazine/sip**

## MATERIALS & SUPPLIES

| | | |
|---|---|---|
| A | Front | 9⅞ x 30½ - ¼ Ply. |
| B | Back | 10 15/16 x 30½ - ¼ Ply. |
| C | Sides (2) | 11⅛ x 13½ - ¼ Ply. |
| D | Aluminum Corners (4) | ⅛ x 1½ x 1½ - 10 15/16 |
| E | Lid/Bottom (2) | 12½ x 29 - ¼ Ply. |
| F | Front/Back Rail (4) | ¾ x 1⅝ - 31¼ |
| G | Side Rails (4) | ¾ x 1⅝ - 14¾ |
| H | Front Cap | ¾ x 2 - 28½ |
| I | Lid Stops (2) | ¾ x 1¼ - 3¼ |
| J | Back Cap | ¾ x 1 1/16 - 29 |
| K | Side Cap | ¾ x 1¼ - 13¼ |
| L | Lid Lip | ¾ x 1¼ - 26 7/16 |
| M | Stay Supports (2) | ½ x ½ - 1⅝ |
| N | Dividers (3) | 12½ x 10½ - ¼ Ply. |
| O | Front Divider Channels (3) | ¾ x 1 - 7 11/16 |
| P | Rear Divider Channels (3) | ¾ x 1 - 9 11/16 |
| Q | Rack Front/Back (2) | ½ x 4¾ - 11¾ |
| R | Rack Spacers | Cut to Fit |
| S | Tray Runners (2) | ¼ x ¾ - 12 |
| T | Tray Fronts/Backs (8) | ¼ x 2½ - 11 |
| U | Tray Sides (8) | ¼ x 2½ - 3¾ |
| V | Tray Bottoms (4) | 10¾ x 3¾ - ⅛ Hdbd. |
| W | Tray Corner Supports (12) | ⅜ x ⅜ - 2¼ |
| X | Bin Top/Bottom (2) | ½ x 4½ - 113/4 |
| Y | Bin Sides (2) | ½ x 4½ - 10½ |
| Z | Bin Shelves (2) | ¼ x 4½ - 11¾ |
| AA | Bin Shelf Lips (6) | 11¼ x ¼ - ⅛ Hdbd. |

- (64) 3/16" x ⅝" Universal Head Rivets
- (64) #8 Flat Washers
- (2) Recessed Pull Handles
- (1) Pull Handle
- (2) Draw Latches
- (2) Lid Stays
- (1) 1½" x 27¾" Piano Hinge
- (8) #8 x 1¼" Fh Woodscrews
- (4) #8 x 1¾" Fh Woodscrews

**Light & Strong.** Riveting sections of aluminum angle into the corners makes this one sturdy tool chest.

The tool chest starts out as four ¼" plywood panels joined at the corners with aluminum angles, as you can see in Figure 1. The thin panels minimize weight, while the corners add strength to the case. Later, the lid and bottom will be added to complete the chest.

**THE PANELS.** As you get ready to size the panels, you'll notice the two sides are identical, but the front and back are different widths. The front panel is a bit narrower than the back to accommodate a "lip" that will help align the lid to the case.

After cutting the panels to size, now is a good time to cut the openings for the handles (Figure 3). To do this, drill a hole in each corner and then use a jig saw to remove the waste. The handles will be riveted to the sides later.

**THE JOINERY.** The panels are simply butted together, as in Figure 1a. Instead of gluing the panels together with weak butt joints, the corners will be reinforced with aluminum angle and rivets. The opposite page covers everything you need to know to do this. I'll just point out a couple of details here.

**DRILL GUIDE.** Once the rivet holes are drilled in the corners (Figure 2 shows the hole locations), you can use them as guides to mark the holes in the panels. Be sure to keep track of which angle you use for each corner, so the holes align when the rivets are installed.

I attached the aluminum corners to the front and back panels first. This leaves plenty of clearance to hammer the rivets later when you attach the sides. One thing you'll notice in Figure 3a is the corners don't extend to the lower edges of the front, back, and side panels. These edges are exposed to fit into a groove cut into the bottom of the chest that you'll build later.

**COMPLETE THE CASE.** Before attaching the sides to the corners, you'll want to go ahead and install the handles in the openings you cut earlier. This is just a matter of following the same procedures you used to install the corners. With the panels and corners done, you can now turn your attention to the bottom and the lid.

1 FIGURE

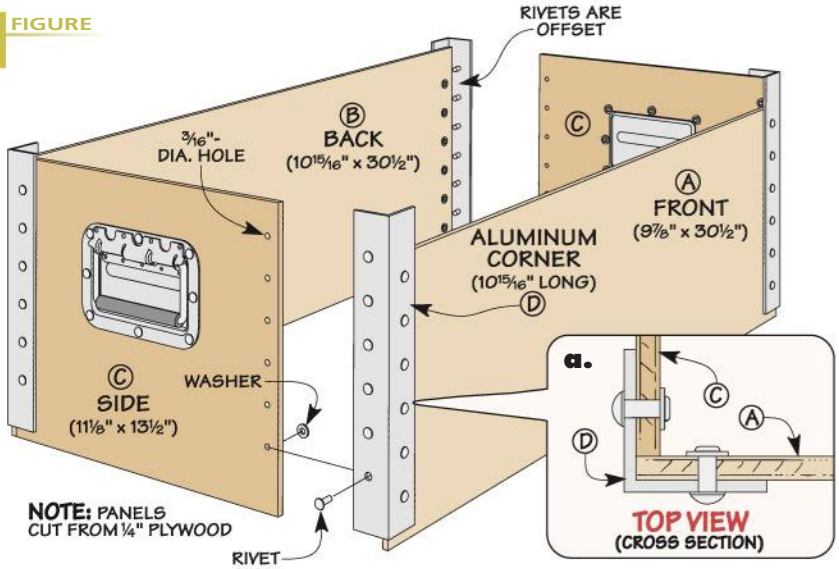


2 FIGURE

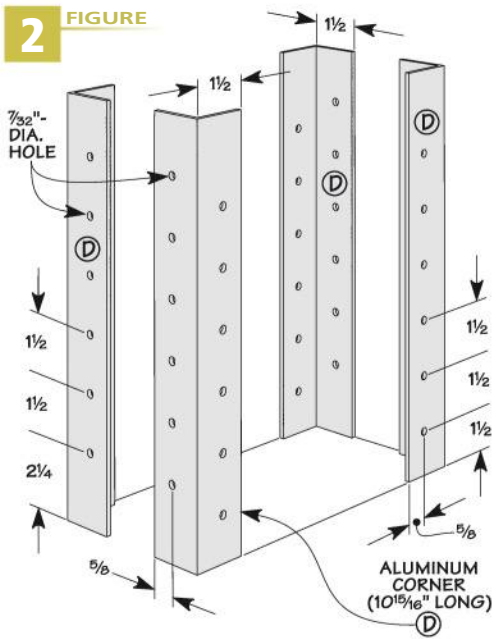


3 FIGURE

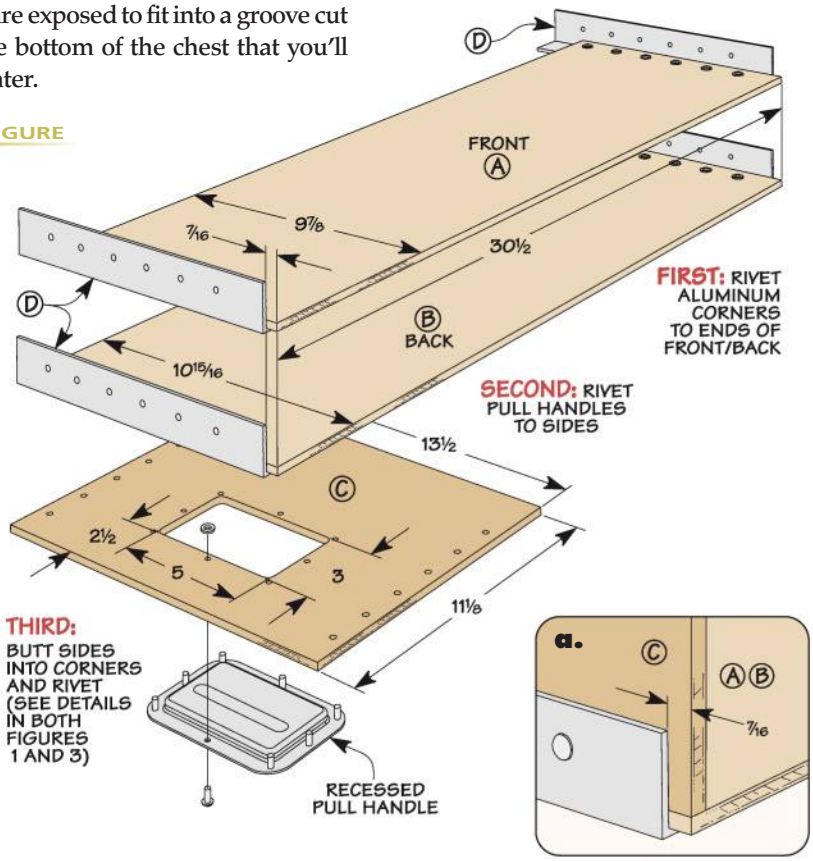

# Making Riveted Joints

Using aluminum angle for the corners is the perfect solution to add strength to the tool chest. And installing the rivets to do this is easy using the simple step-by-step process in the photos below. But there are couple things I'd like to mention first.

**Offset Holes.** First, you'll notice the two sets of holes in each angle are offset (photos at right). This makes it easier to install the rivets, because they won't interfere with each other in the corners.

Second, the holes drilled in the aluminum are $^1/_{32}$" larger than the diameter of the rivets, while the holes in the plywood are an exact fit. This ensures the rivets slip through both parts without any problem during installation in case the mating holes in each piece are little off. The tight fit in the plywood (along with some tape on the corners) will secure the rivets as they're hammered in place. And don't worry, the rivets form a tight fit in the aluminum as they flatten.

Finally, when you install the rivets, make sure you have a solid "anvil" to absorb the hammering. I used a hard maple board that extended to the floor and clamped it in my bench vise (above photo).

**Perfect Rivets.** A hardwood block (maple) acts as an "anvil" while you set the rivets with a hammer and riveting tool.

**Square Up Corners.** To true up aluminum angle, tap the corner to spread the angle, or squeeze it in a vise if the angle is too wide.

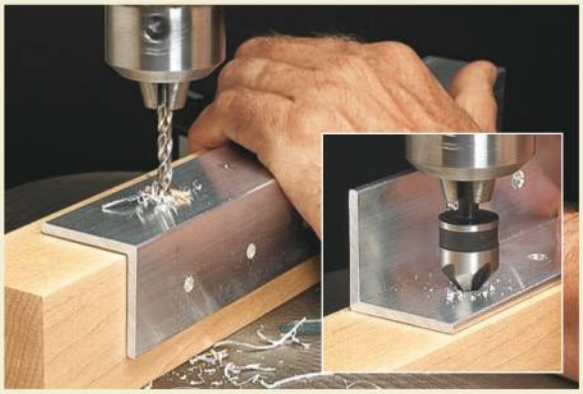

**Drill the Holes.** Using a hardwood backer board for support, carefully drill the holes in each corner. Use a countersink to clean up the holes.

**Mark Holes.** Use the corners to mark holes in the panels, then change to a smaller bit to drill the holes.

**Install Rivets.** Tape rivets to hold them in the angles. A riveting tool "mushrooms" them for a secure connection.

**Install Side Panels.** After riveting the corners to the front and back panels, follow the same procedure for the sides.

With the front, back, and sides joined together, you're ready to complete the assembly of the chest. The first step here is adding the bottom (Figure 4). Not only does it square the case, it adds a lot of rigidity. Once that's done, all you'll need to do is add a few pieces of trim and then the lid.

**MAKING THE FRAMES.** The bottom is a frame and panel assembly. And because the base fits into the frame, that's where I started. After ripping the frame parts to width, I cut them to rough length. Next is a trip to the table saw to cut a rabbet in the frame pieces for the bottom panel (Figure 4b). A dado blade makes quick work of this task.

**ADD A GROOVE.** Once the rabbets are cut, you can cut the groove that the case panels will sit in (Figure 4b). What you're looking for here is to size the groove to match the thickness of the case panels.

**MITER THE FRAME.** With that done, cut the bottom panel to size and miter the frame parts around it. Then, glue the panel in the rabbets, and clamp the assembly.

**ADD THE CASE.** Once the glued has dried, you can attach the frame to the case. Simply run a bead of glue in each groove and ease the case in place. A few light taps with a rubber mallet will seat the case firmly in the groove. At this point, you're ready to work on the top edges of the case.

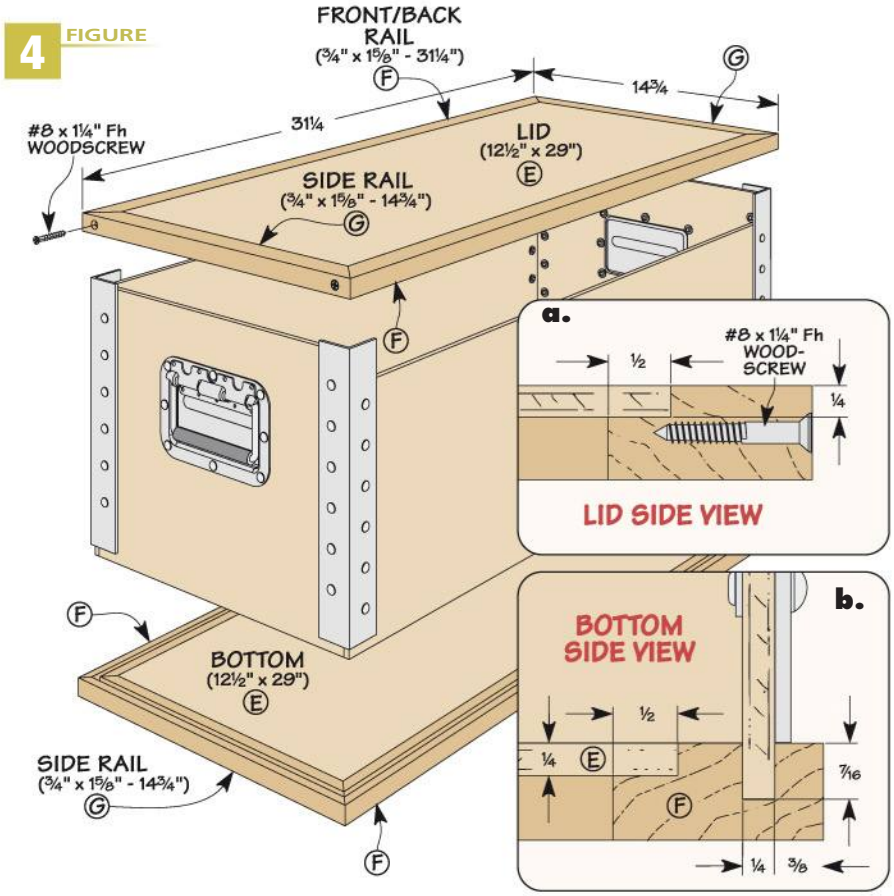


**TRIM IT OUT.** As I mentioned earlier, the top edges of the case panels aren't flush with the aluminum corners. To flush them out and cover the edges of the plywood panels, you'll need to add some hardwood caps. The caps also add a little extra rigidity to the top of the case.

I started with the front cap (Figure 5). It's not as long as the back cap to avoid the rivets attaching the front panel to the corners, as in Figure 5b. And rabbeting one face allows the cap to wrap around the case panel.

To "finish out" the front edge, you'll need to add a pair of lid stops (Figure 5b). The stops "extend" the front cap over the side panels without interfering with the corner rivets. And I mitered the inside ends of the stops to match the lip that will be added to the lid later. (Cutting the lip and

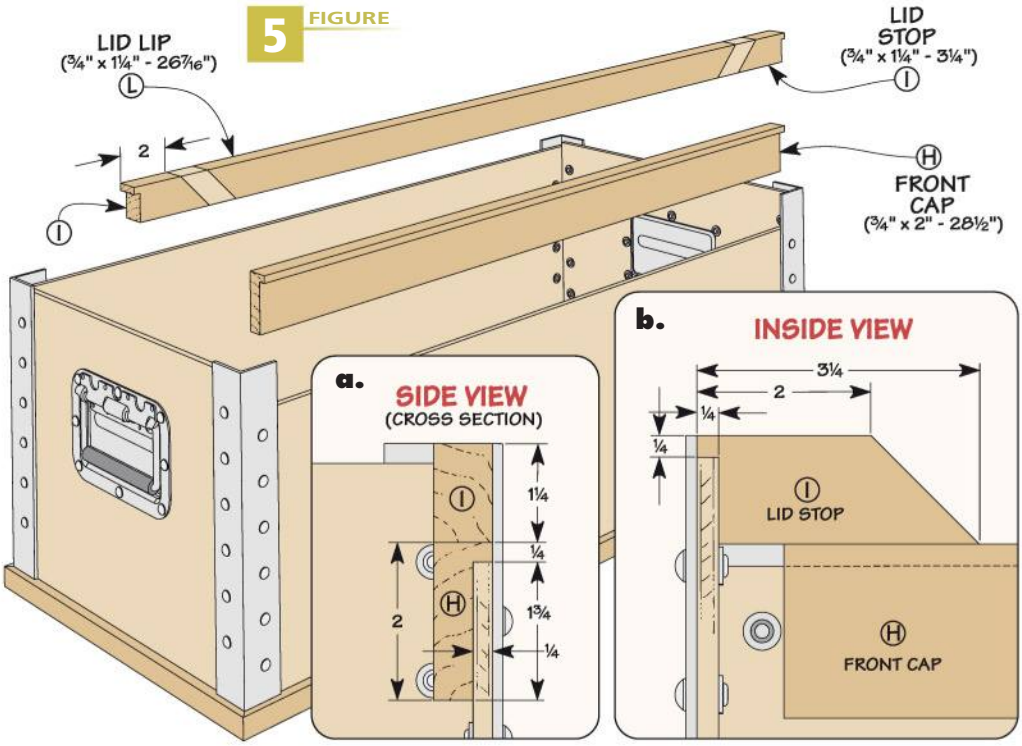

stops from the same workpiece help ensure they'll fit back together later.)

Once the front cap and stops are in place, you can turn to the side caps. Their front ends butt up against the lid stops, while the rear is notched to fit over the back panel, as in Figures 6 and 6a.

Finally, you can install the back cap between the side caps. To accommodate the piano hinge that will attach the lid to the chest, the back cap sits slightly lower than the side caps, as seen in Figure 6b.

**ADDING THE LID.** With the case and bottom complete, you can focus your attention on the lid. The assembly process is similar to the bottom. You'll follow the same process, with two exceptions — the lid frame has no groove and the corners are screwed together. I did this to add strength.

Before you attach the lid to the case, there are a couple of things left to do. First, attach the lip you cut earlier to the lid, like you see illustrated in Figure 7. When the lid is closed, the lip should nestle snugly between the stops to keep the lid aligned with the case.

The lip also serves as a mounting surface for the draw latch catches (Figure 7a). You'll also need to add small stay supports to the lid to position the lid stays properly.

**FINISHING TOUCHES.** To complete the basic chest, all that's left to do is install the piano hinge, like you see in Figure 7b. Adding a couple of coats of paint will make this tool chest stand out at any job site.

At this point, you could use the chest just the way it is. It already provides plenty of storage. But to better organize the inside of the chest and make finding tools and hardware a snap, turn the page.

**6** FIGURE

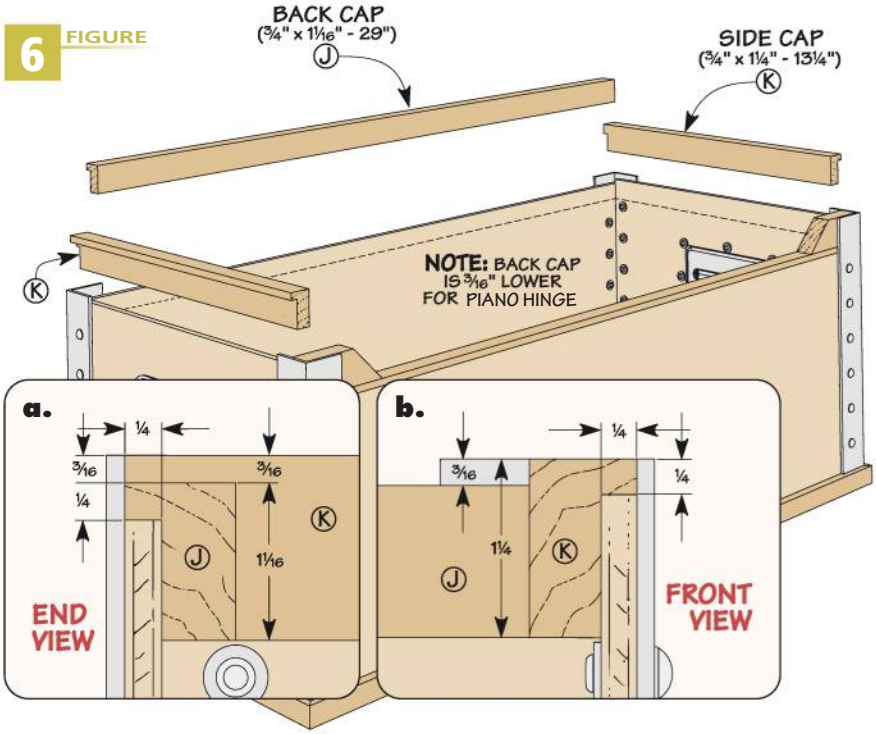


**7** FIGURE

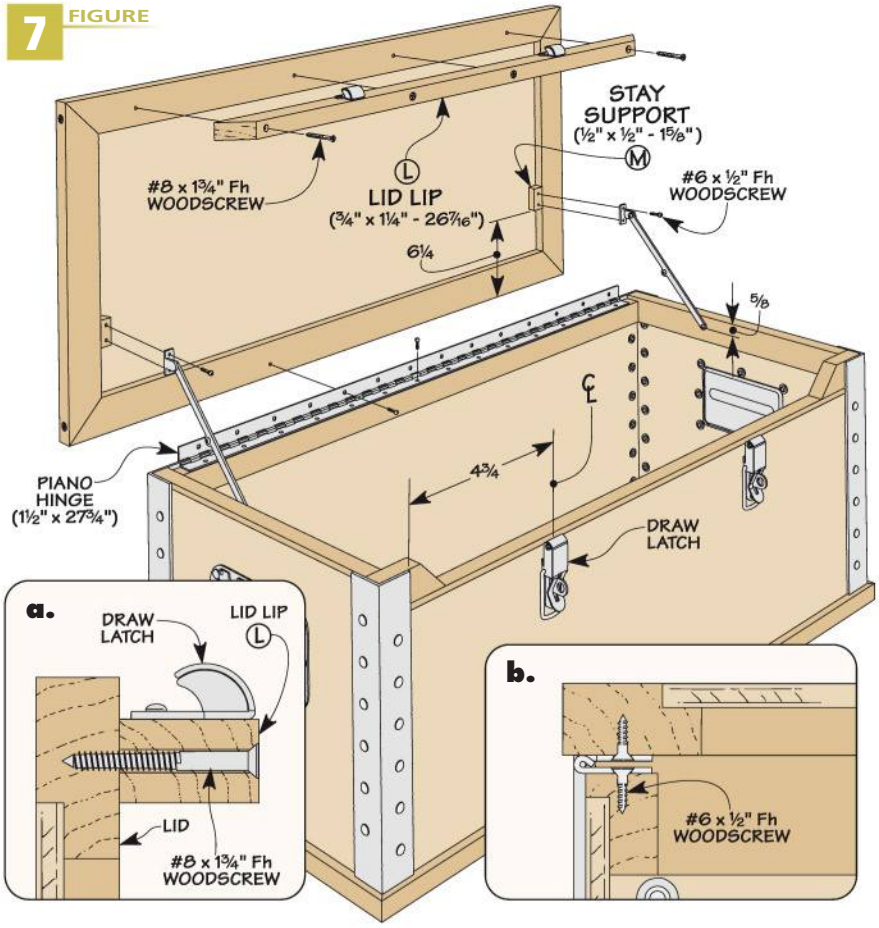


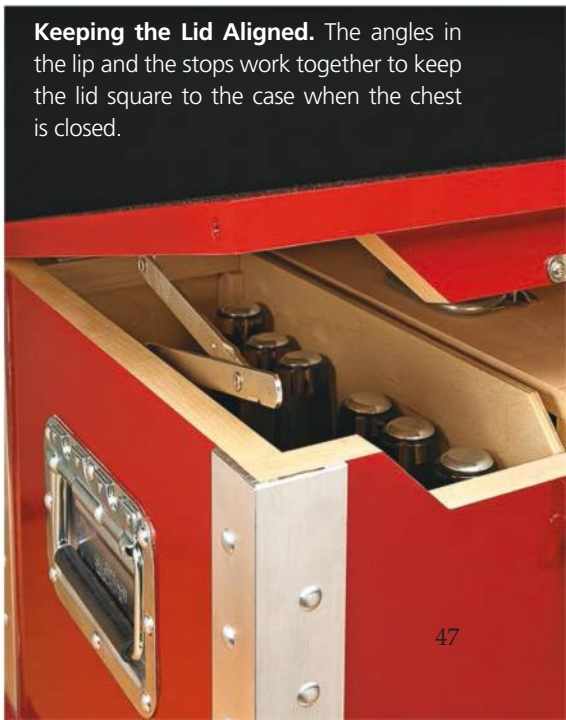

**Keeping the Lid Aligned.** The angles in the lip and the stops work together to keep the lid square to the case when the chest is closed.

# Tool Chest **Accessories**

By itself, the tool chest provides a lot of great storage for tools, hardware, and accessories. But things can get lost and rattle around in a wide-open box. So to keep things easy to find, I built a few, simple organizers.

For starters, you can add vertical dividers to break up the space. Then, there's a rack for hand tools (inset photo). You can also add a sliding tray, and finally, a removeable bin to take your tools and hardware "on the go."

**DIVIDERS.** The first step in organizing the chest is to add dividers and a set of channels to position them. As you can see in Figures 8 and 8a, I added three dividers to the chest. You can place them anywhere in the chest you'd like, but I spaced the dividers to allow for the other accessories.

The key to determining the spacing for the dividers is to decide what accessories you want in the chest before you install them. For example, if you add the sliding tray to the chest, you'll need to position the dividers to support it. The same goes for the pull-out bin. It fits between the channels that hold the dividers in place, as you can see in Figure 8a.

Once you've decided on the arrangement of the accessories, you'll need to make a pair of channels to hold each divider. They're just hardwood strips with a centered groove. They fit under the caps and are glued in place.

The dividers slide into these channels (Figure 8a). The dividers are not glued in

**Hand Tool Rack.** This handy rack can be customized to fit a variety of small hand tools.

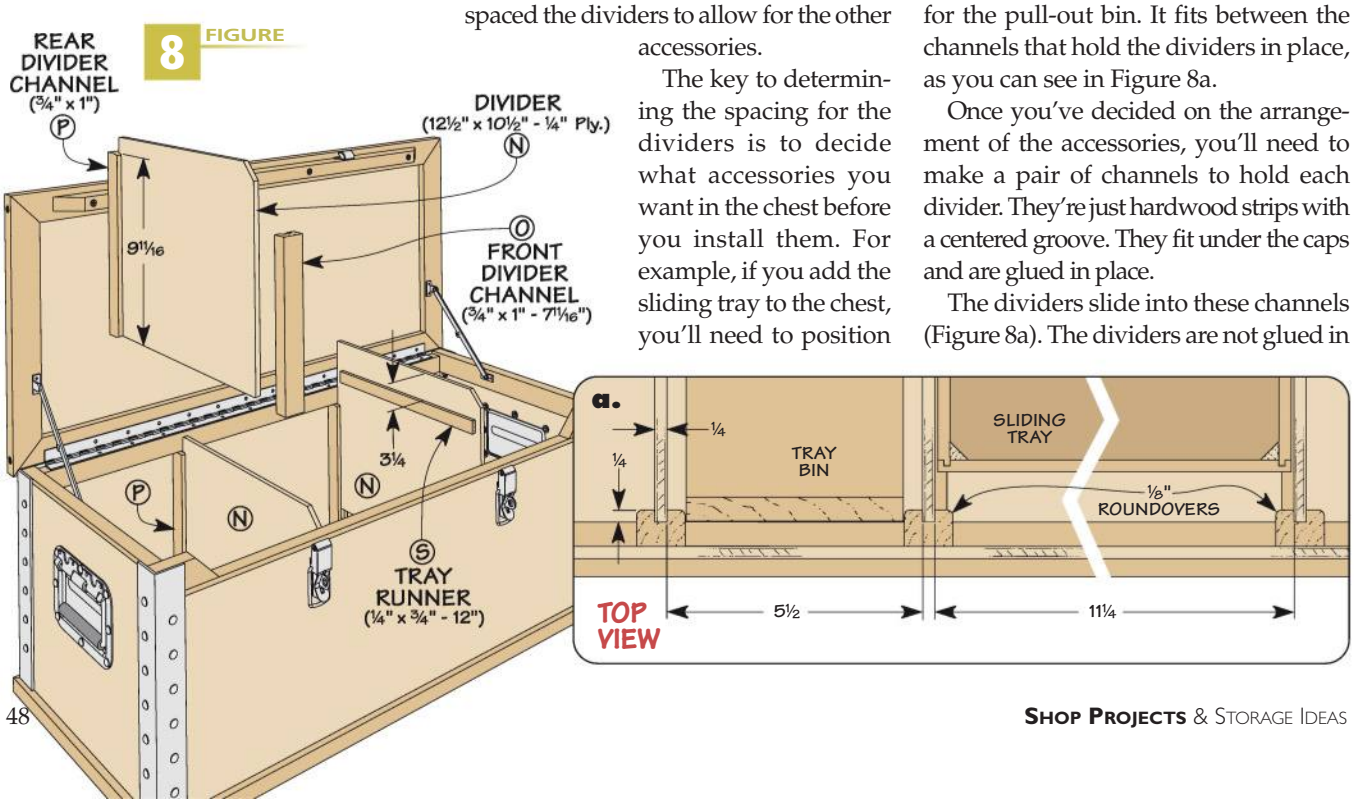

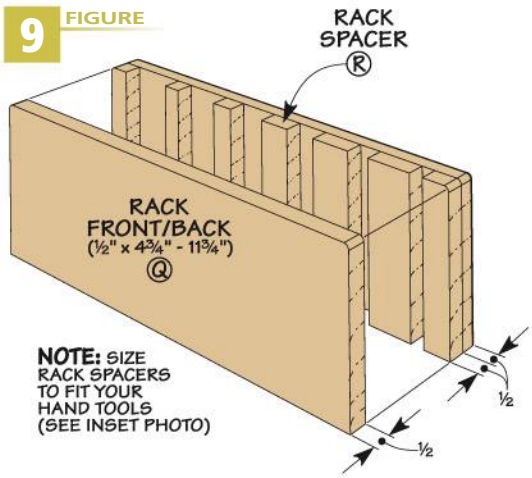


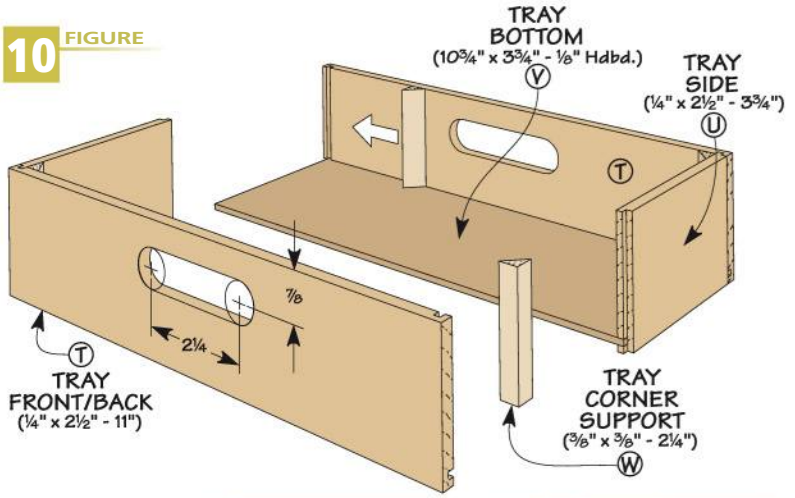


so you can remove them if you need to store large items in the tool chest.

**TOOL RACK.** A handy accessory for the chest is a small tool rack (inset photo on previous page). Putting it together is easy. As Figure 9 shows, the rack consists of a set of spacers sandwiched between two small panels. I built mine to hold a set of chisels, but by varying the widths and thickness of the spacers, you can store screwdrivers, wrenches, pliers, and even measuring tools, like rules and a combination square.

**TRAY.** Another storage option for the chest is the sliding tray in Figure 10. It's nothing more than a rectangular box with a hardboard bottom and cutouts for handles.

There are a couple of things to mention about building the tray. To create a strong, sturdy box, I used tongue and dado joinery. And to add even more strength to the tray, I glued support blocks in the corners (Figure 10a). The tray bottom fits in grooves cut into the tray's sides, front, and back, as you can see in Figure 10b.

Once the tray is assembled, it will rest on runners attached to two of the dividers (Figure 8, previous page). This way, the tray can be slid back and forth in the chest as needed.

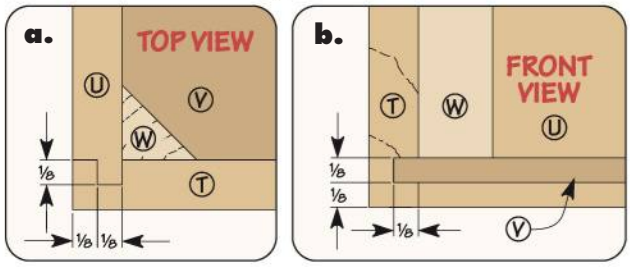


**PULL-OUT BIN.** Now, you may want to build several of the trays just described. Why? Because the pull-out bin in Figure 11 can hold up to three additional trays.

Since those trays can hold a lot of tools and hardware, the bin is built a little beefier than the other accessories. The top, bottom, and sides are cut from ½"-thick stock. The tongue and dado joinery is reinforced with screws (Figure 11b). But to keep the bin lightweight, the two shelves are ¼" thick and fit into dadoes.

And, to keep the trays from sliding out, there's a hardboard lip on both edges of each shelf (Figure 11a). To remove a tray, lift it over the lip and pull it out.

So, as you can see, the chest offers plenty of storage. And adding these accessories will make it more organized and easily accessible.

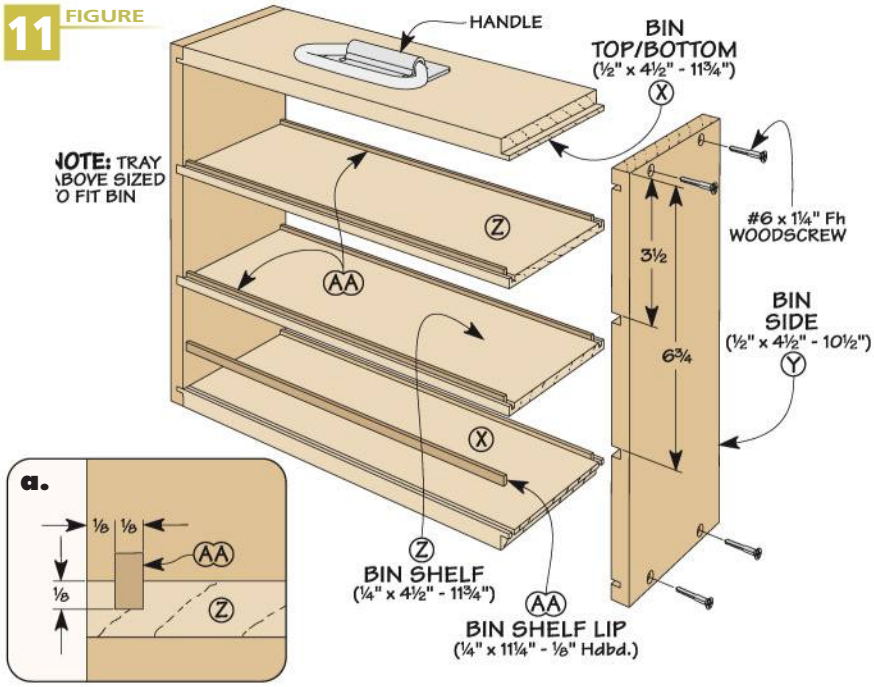


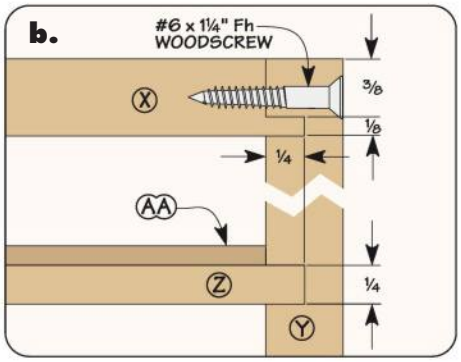

# Traditional Tool Chest

More than just a place to store your tools, this traditional chest also gives you a chance to show off your skills as a woodworker.

There's something about an old tool chest that's hard to describe. Whenever I come across one, I can't resist the temptation to open the lid to see what might be inside. And for a long time, I've wanted to build a chest like so many of the ones that I've seen.

But how do you build an "old" tool chest? Well, we did it by using some of the same details you would find in an antique chest — solid wood construction, a frame and panel lid, and heavy iron hardware. There's even an old-fashioned hasp and lock to keep everything inside safe and secure.

This tool chest also features through dovetail joints. But many old tool chests were built using rabbet joints and nails. So we've included instructions on building the chest using simpler construction as well.

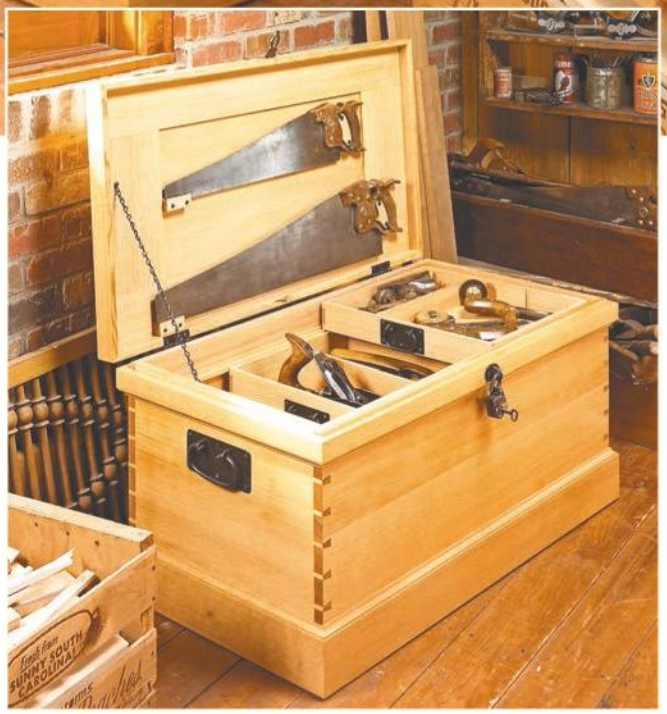

**Select Storage.** Inside the tool chest, a pair of sliding trays provides storage for fine tools or smaller items that might possibly get buried if kept in the main section of the chest. The lid offers space for storing a couple of hand saws.

# Construction Details

**OVERALL DIMENSIONS:**
36" W x 17¾" H x 20" D

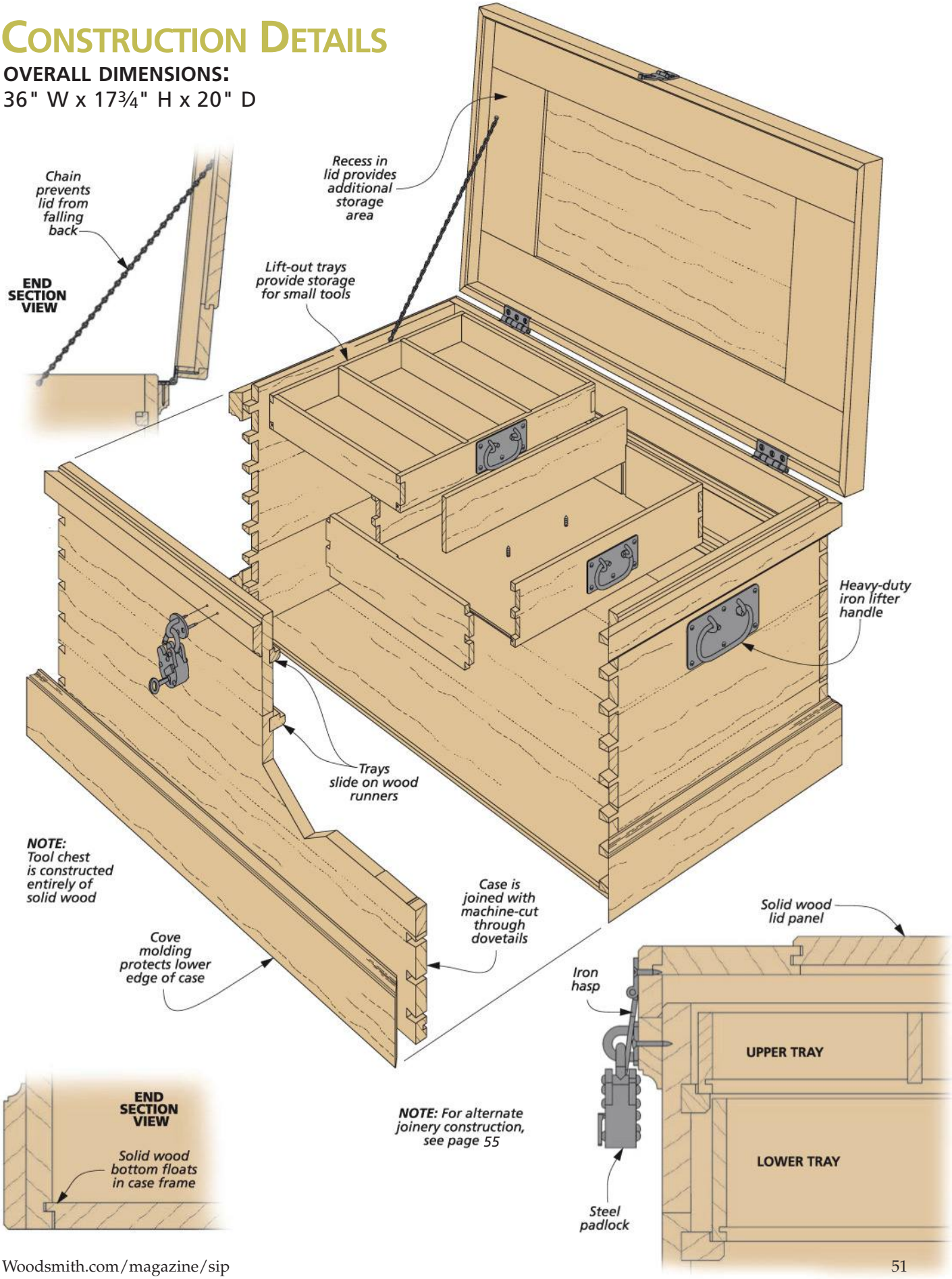


NOTE: For alternate joinery construction, see page 55

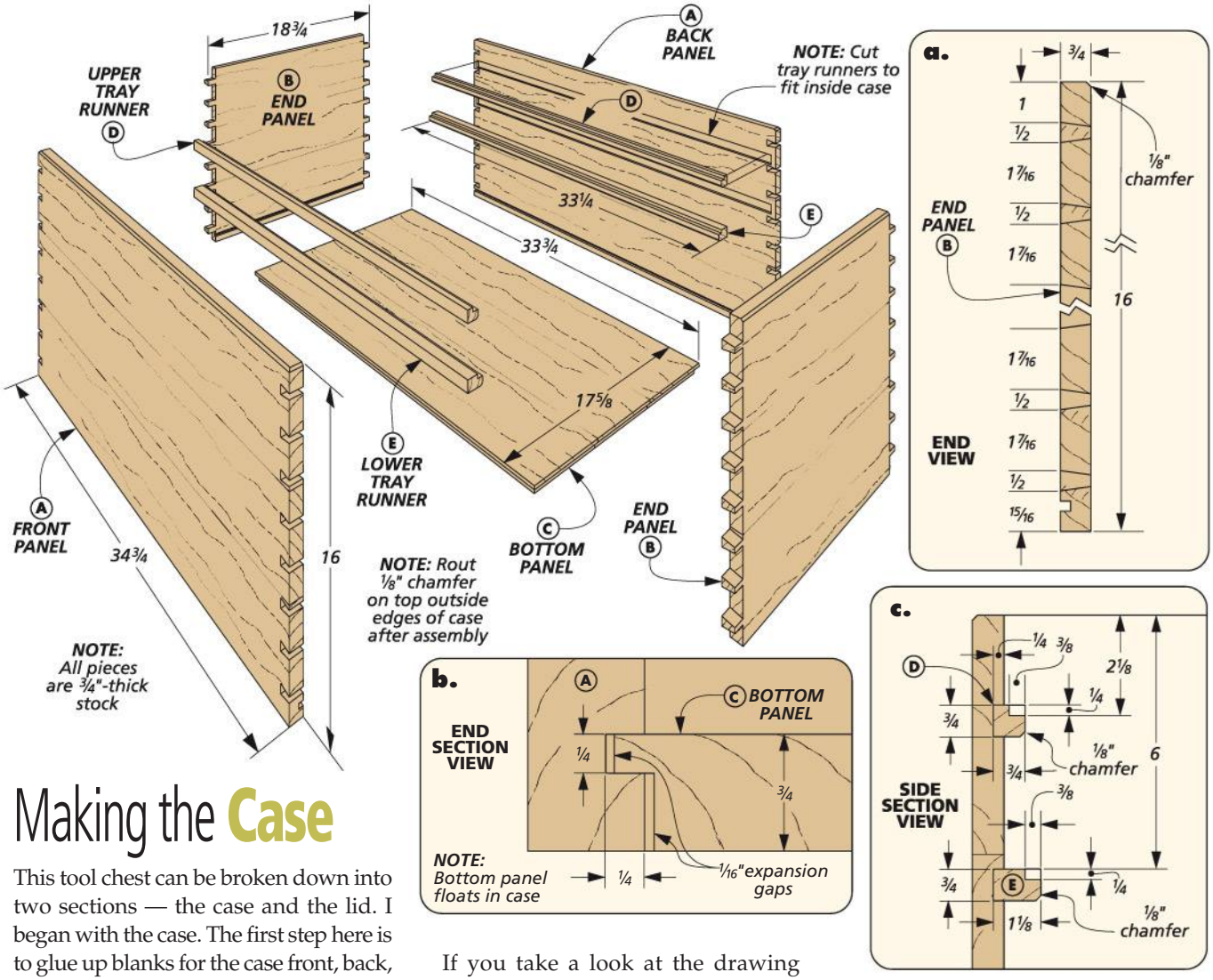


# Making the Case

This tool chest can be broken down into two sections — the case and the lid. I began with the case. The first step here is to glue up blanks for the case front, back, and ends. But before you can cut these to finished length, you need to decide on the joinery.

If you take a look at the drawing above, you'll see that I built my tool chest using dovetail joints, both for their strength and appearance. Take a look at detail 'a' and the opposite page for more on making these dovetails.

If you don't have a dovetail jig, rabbet joints and nails are a good alternative for building the case. For more on making this version of the tool chest, check out the Designer's Notebook alternative on page 55.

**GROOVES.** With the case joinery complete, the next step is to cut a groove on the inside face of each piece for the case bottom. You'll also need to cut a pair of stopped grooves on the inside face of the case front and back for the tray runners (box at left).

**BOTTOM.** The case bottom is a solid wood panel that is rabbeted to fit in the grooves in the case pieces. One thing to note here is that I left a slight (1/16") expansion

# Rout Stopped Grooves

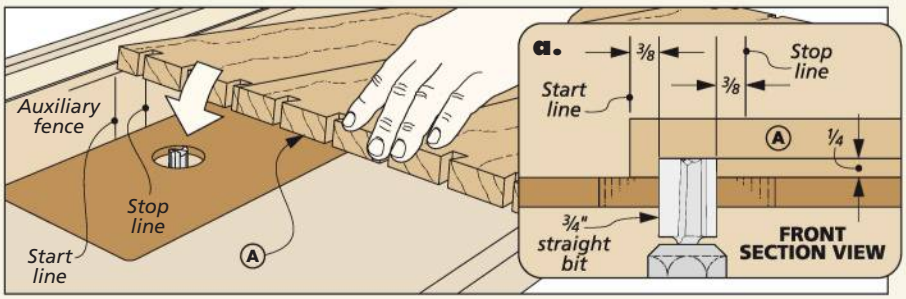


**Stopped Grooves.** To make the stopped grooves for the tray runners, I first set up the fence on my router table to position each groove. Then I drew a couple of lines on the fence to indicate the starting and stopping points of the cut. Finally, I routed each groove by lowering the workpiece down onto the rotating bit and pushing it forward.

gap along both edges of the bottom panel, as you can see in detail 'b.'

**RUNNERS.** After gluing up the case and routing a chamfer around the top edge, you can make the tray runners and glue them in place, as shown in detail 'c' above.

While you could cut the through dovetails on the tool chest by hand, I chose to use a dovetail jig for a couple of reasons. Speed was the primary one, but consistency was also a large factor. Cutting all those dovetails by hand would have taken a lot of time, and because the joints are the focal point of the whole tool chest, I wanted them to be as accurate and precise as possible. That's where the router and dovetail jig comes in.

Although they may look complicated, the idea behind most dovetail jigs is pretty simple. In a nutshell, a bushing is used to guide the bit in and out of the fingers of a template, removing the waste in between the tails and pins of the joint. One edge of the template is used to rout the tails, and the other is used to rout the pins.

To rout the dovetails for the tool chest, you'll need a jig that is capable of cutting through dovetails with variable spacing in a workpiece that is 16" wide. I used a *Leigh D4* dovetail jig, but there are several other jigs on the market that will do the job. Just make sure to read the directions that come with your jig before getting started to avoid any surprises.

**SPACING.** Before you can actually start routing the dovetails, you'll need to adjust the spacing of your template to match the desired spacing of the joints. (Detail 'a' on the opposite page shows the spacing of the pins.)

With the *Leigh* jig, this is simply a matter of loosening a screw that holds each finger in place and then sliding the fingers into position (and this is true for most commercial jigs as well). Once you've got the fingers in position, you can start routing the dovetails, as shown in the photos to the upper right. I routed the tails first, then the pins.

## Machine-Cut Dovetails

**Start with the Tails.** After setting the spacing of the fingers, you're ready to rout the tails on the ends of the front and back panels of the tool chest. A baseline drawn on the face of the board will help you set the depth of the router bit.

**Rout the Pins to Fit.** With the tails completed, the next step is to rout the pins on the end panels. You'll start by making the pins a hair wide. Then you can adjust the jig to gradually trim the pins down to match the tails for a perfect-fitting joint.

## Router Bits

An important part of any dovetail jig is having the right router bits. For most jigs, you'll need two different router bits. To rout the tails, a dovetail bit is used (right bit in photo). The angle of the bit matches the angle of the dovetails you plan to make. (For the tool chest, I used a bit with an 8° angle.)

To rout the pins, all you need is a straight bit (left bit in photo). This bit simply wastes away the material in between the pins. The tapered fingers of the jig are what determines the shape of the pins.

It's worth noting that many jigs (including the Leigh) are designed to work only with specific bits.

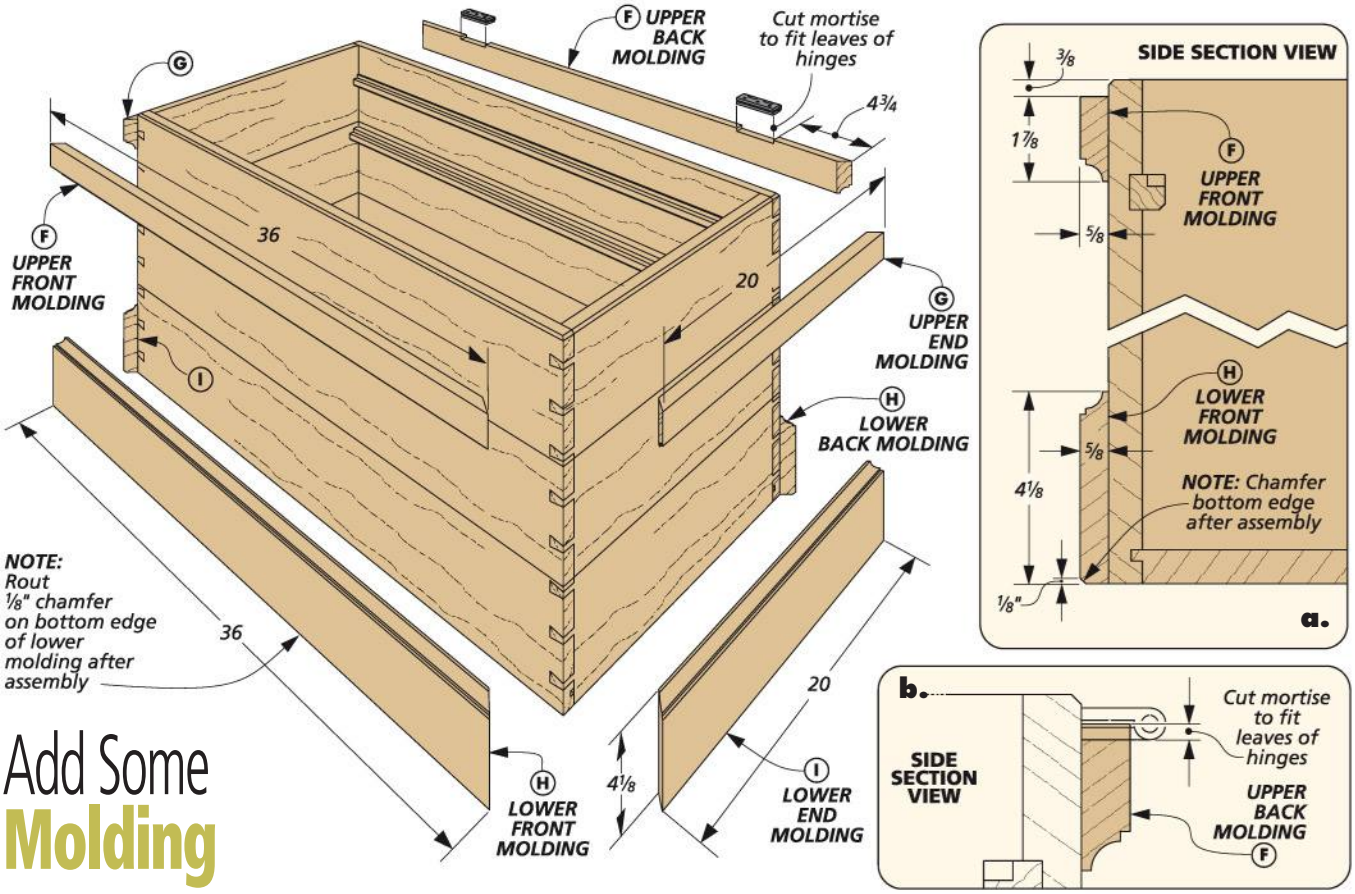


# Add Some Molding

Once you've assembled the case, all that's left before moving on to the lid is to add some molding to the top and bottom of the case.

If you take a look at the drawing above, you'll see that I used the same profile on both the upper and lower molding — a cove with a small shoulder. The only difference is in the width of the pieces. (For more on making the molding, take a look at the box below.)

The molding is simply mitered to length to fit around the case. The lower molding pieces can be glued in place so they're flush with the bottom edge of the case, as you can see in detail 'a' above. But attaching the upper molding involves a couple of extra steps.

**OTHER DETAILS.** To begin with, you'll need to cut a pair of mortises in the upper back molding piece for the lid hinges (detail 'b').

Next, if you take a look at detail 'a' above, you'll notice that the upper molding is installed below the top edge of the case. This creates a lip for the lid to fit around. To help position these pieces, I simply scribed a line all around the case, ⅜" down from the top edge.

The last step before moving on to the lid is to rout a chamfer all around the bottom of the case, as shown in detail 'a.'

# Cove Molding

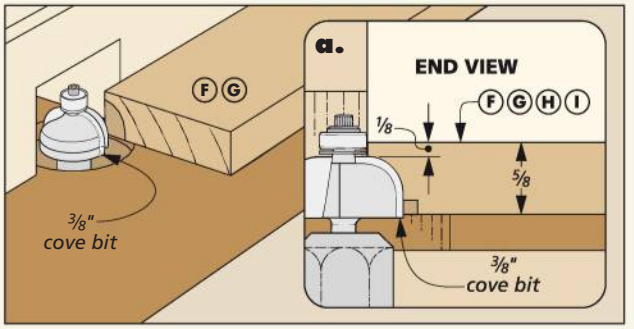


**Rout the Cove.** After cutting the extra-long molding blanks to width, I routed a cove along one edge of each piece.

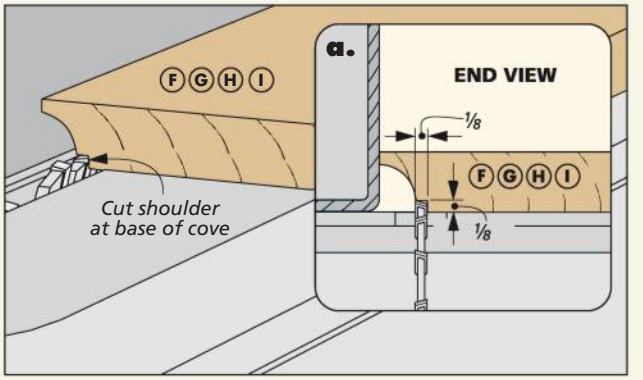


**Create Shoulder.** To create a square shoulder at the base of the cove, I cut a shallow rabbet along the edge of the blank.

# A Simpler Version

For a simpler version of the tool chest, you can substitute a basic rabbet joint in place of the dovetails. (You'll have to make the end panels 1" shorter than the dovetailed version.) Then to give the chest a traditional look, I reinforced each joint with some decorative, wrought-head nails. To replace the dovetails on the two sliding trays, I used tongue and dado joints.

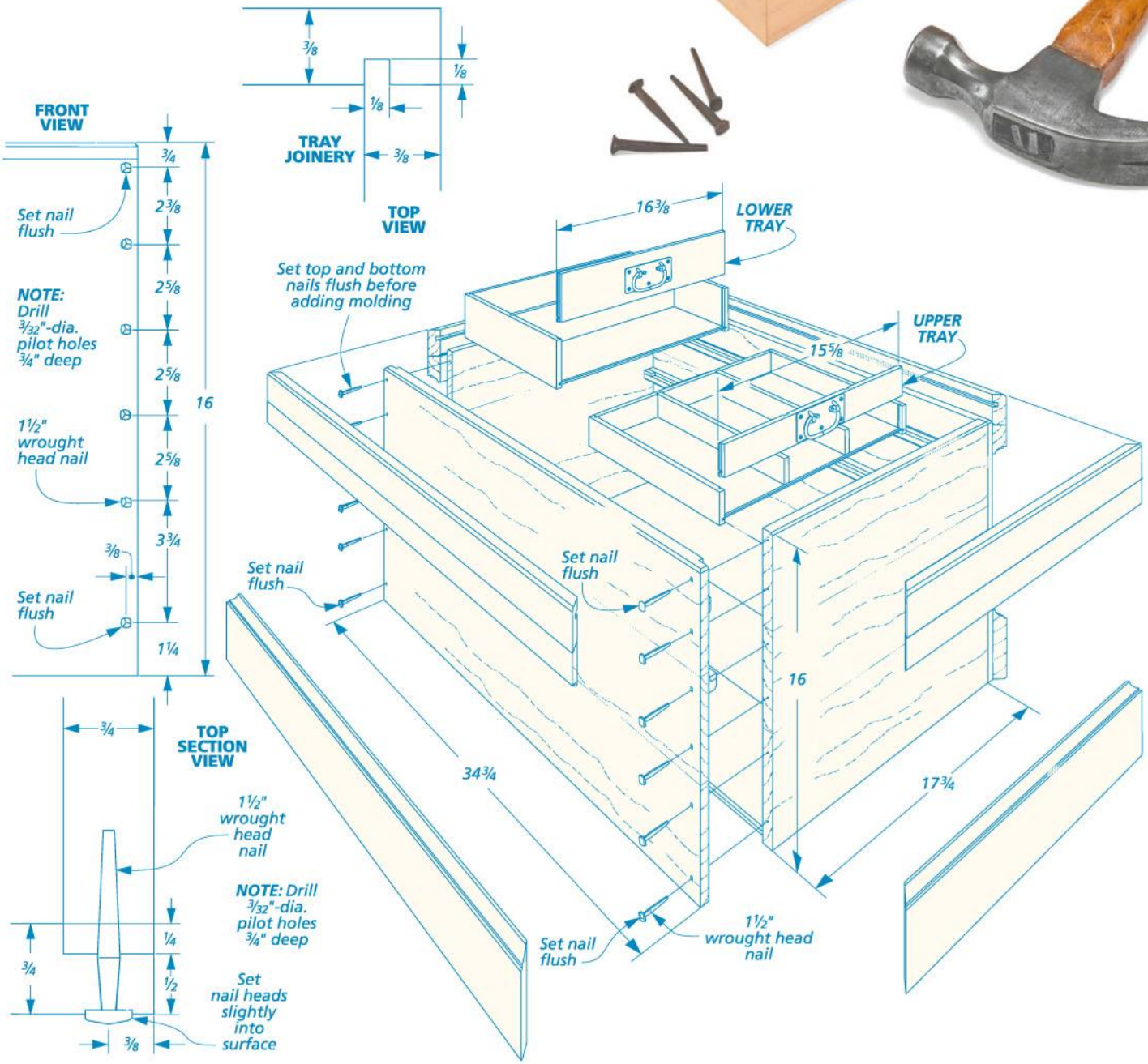

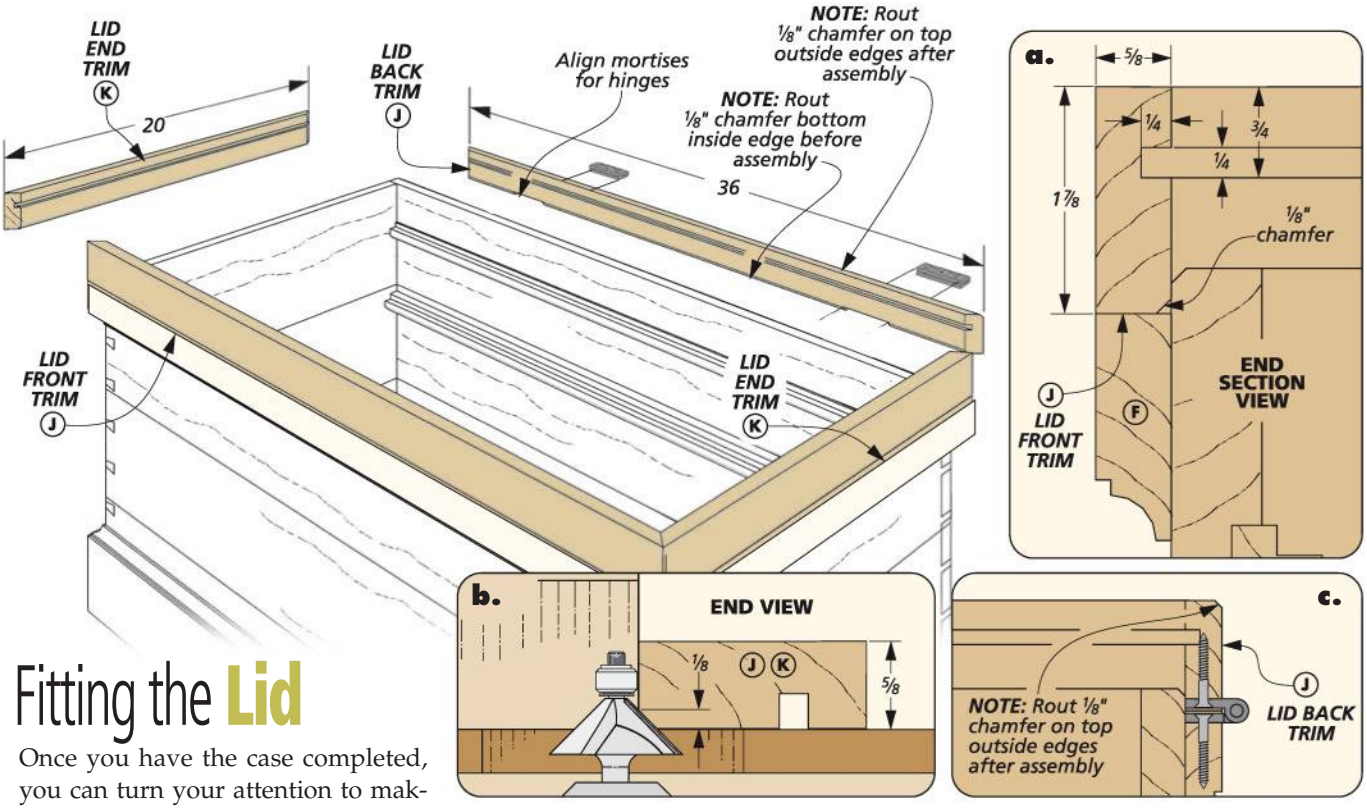


# Fitting the Lid

Once you have the case completed, you can turn your attention to making the lid. Basically, the lid consists of a panel captured by a frame. Then this frame and panel assembly is wrapped with some trim pieces that match up with the upper molding on the case of the tool chest.

I started on the lid with the trim pieces first. This may sound a little backward, but there's a reason for this. Since the lid trim pieces have to end up flush with the molding around the top of the case, I wanted to make the trim pieces and cut them to size first to fit around the case. Then you can make the frame and panel assembly to fit inside the trim pieces.

**LID TRIM.** As you can see in the drawing above, there really isn't much to the lid trim. Each piece has a chamfer on the lower, inside edge and a groove on the inside face that will be use to hold the lid frame pieces later. I made the lid trim pieces extra long to start with, and then carefully mitered them to length to fit around the case.

**HINGE MORTISES.** With the trim pieces mitered to length, the next step is to cut a pair of hinge mortises in the back trim piece, as shown in detail 'c.' You want to make sure that these mortises line up with the ones that you cut in the case molding earlier. Once these are cut, you can set the lid trim pieces aside while you work on the rest of the lid.

**FRAME & PANEL.** If you study the drawing on the opposite page you'll get an idea of how the entire lid goes together. As I mentioned earlier the center of the lid is made up of a frame and panel assembly. Making this frame and panel isn't difficult. It's nothing more than a basic stub tenon and groove frame surrounding a solid wood panel. But the trick is to size the frame to fit inside the trim pieces you've already made, and then to size the panel to fit in the frame.

The first step is to make the rails and stiles for the frame. When you're sizing these pieces, keep in mind that you'll need to allow for a ¼"-wide tongue all around the frame to allow it to fit in the grooves in the lid trim pieces. (You can see this tongue in detail 'c' on the opposite page.)

After you've cut the rails and stiles for the frame to size, you can start on the stub tenon and groove joints that hold them together. Details 'a' and 'b' and

## Fitting the Lid Trim

To check the fit of the mitered lid trim pieces, I dry assembled them around the case, using a band clamp to hold the pieces together. Clamping up the pieces beforehand also allowed me to take measurements for the frame and panel assembly that makes up the rest of the lid.

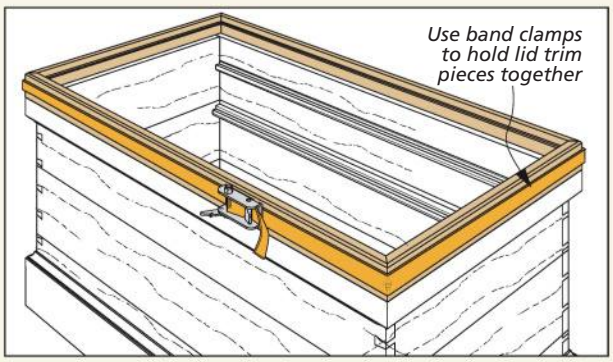

the box at the bottom of the page will give you details on the joinery.

**LID PANEL.** With the joinery on the rails and stiles complete, you can glue up the blank for the lid panel and cut it to size.

If you take a look at detail 'c,' you'll notice that a groove is cut all around the edge of the panel to create a tongue that interlocks with the groove in the frame. But to allow the solid-wood panel room to expand and contract, I left a small expansion gap along the long edges of the panel, as you can see in detail 'c.'

Before you can assemble the lid, there are a couple more steps to take care of. First, I routed an ⅛" chamfer all around the top edges of the lid panel.

Next, I cut a tongue along the outer edge of each frame rail and on the ends and outer edges of the frame stiles. This tongue is sized to fit in the grooves in the lid trim pieces. But you also need to size the overall frame and panel assembly so it fits snug inside the lid trim. This all requires some careful attention to detail.

**ASSEMBLY.** At this point, you're ready to assemble the lid. I started by gluing up the frame around the lid panel. The only thing to note here is that you don't want to glue the panel completely into the frame. Instead, just use a drop of glue at each end of the panel to keep it centered. This way, the panel can still expand and contract with seasonal changes in humidity.

After gluing up the frame and panel, you can add the lid trim. These pieces are simply glued up around the frame.

**CHAMFER.** The last step is to rout a chamfer all around the outside edge, as shown in detail 'c' above. Then you can move on to making the trays.

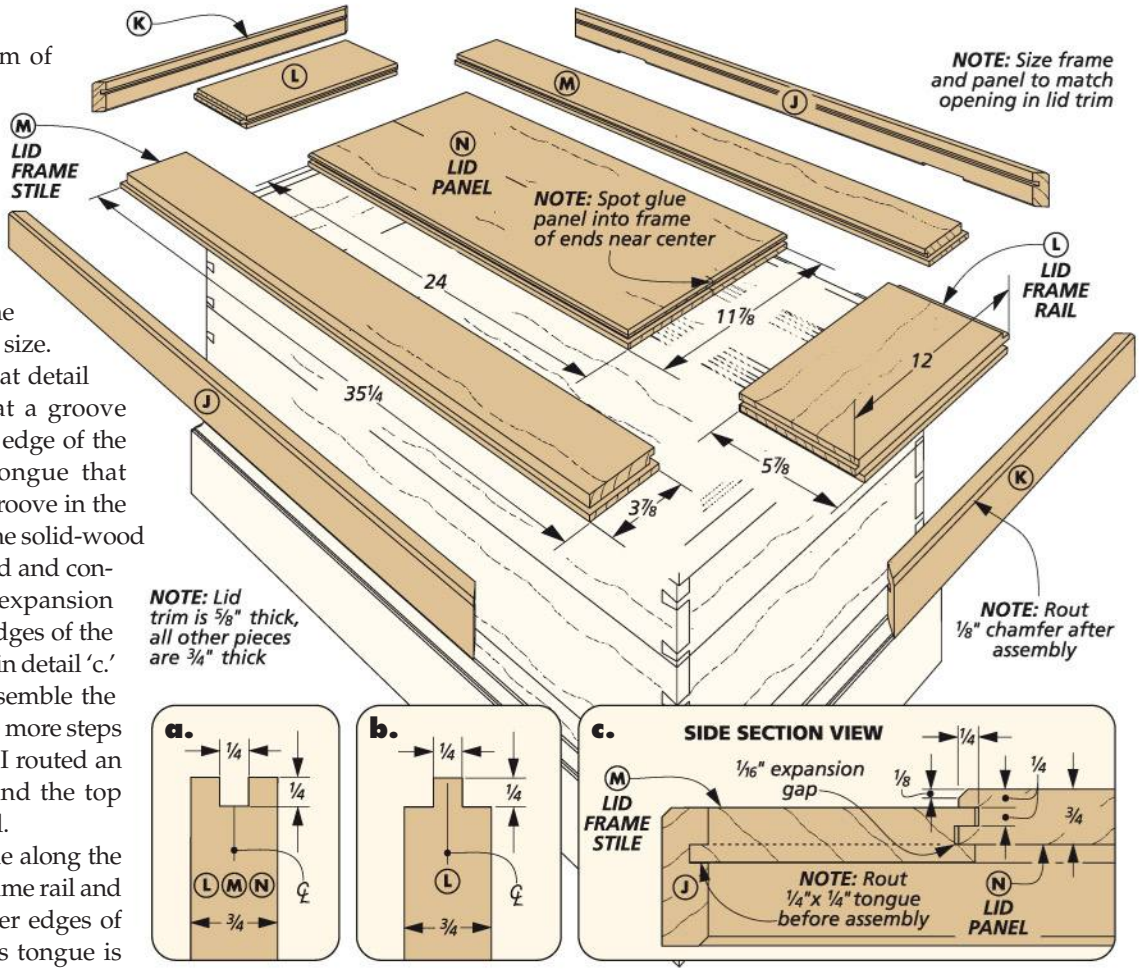


# Stub Tenon & Groove Joinery

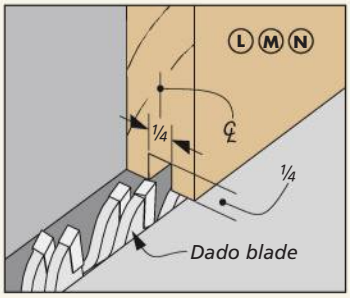


**Cut the Grooves.** With a dado blade on your table saw, cut a groove along the inside edge of the rails and stiles of the lid frame.

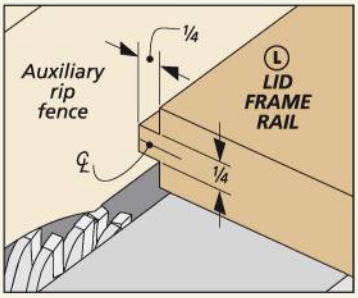


**Size Tongues to Fit.** Bury the dado blade in an auxiliary fence to cut a centered tongue on each end of the rails to fit the grooves in the stiles.

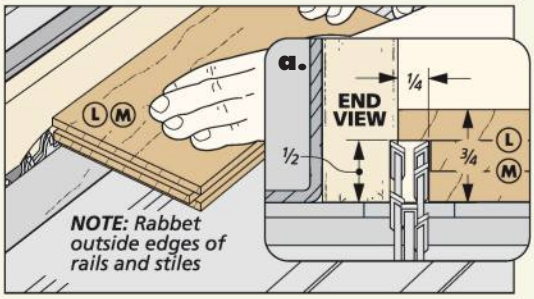


**Fit the Frame Pieces to the Lid Trim.** Before gluing up the frame and panel, cut a tongue on the outer edges of the frame pieces as well as the ends of the stiles to fit in the grooves in the lid trim pieces.

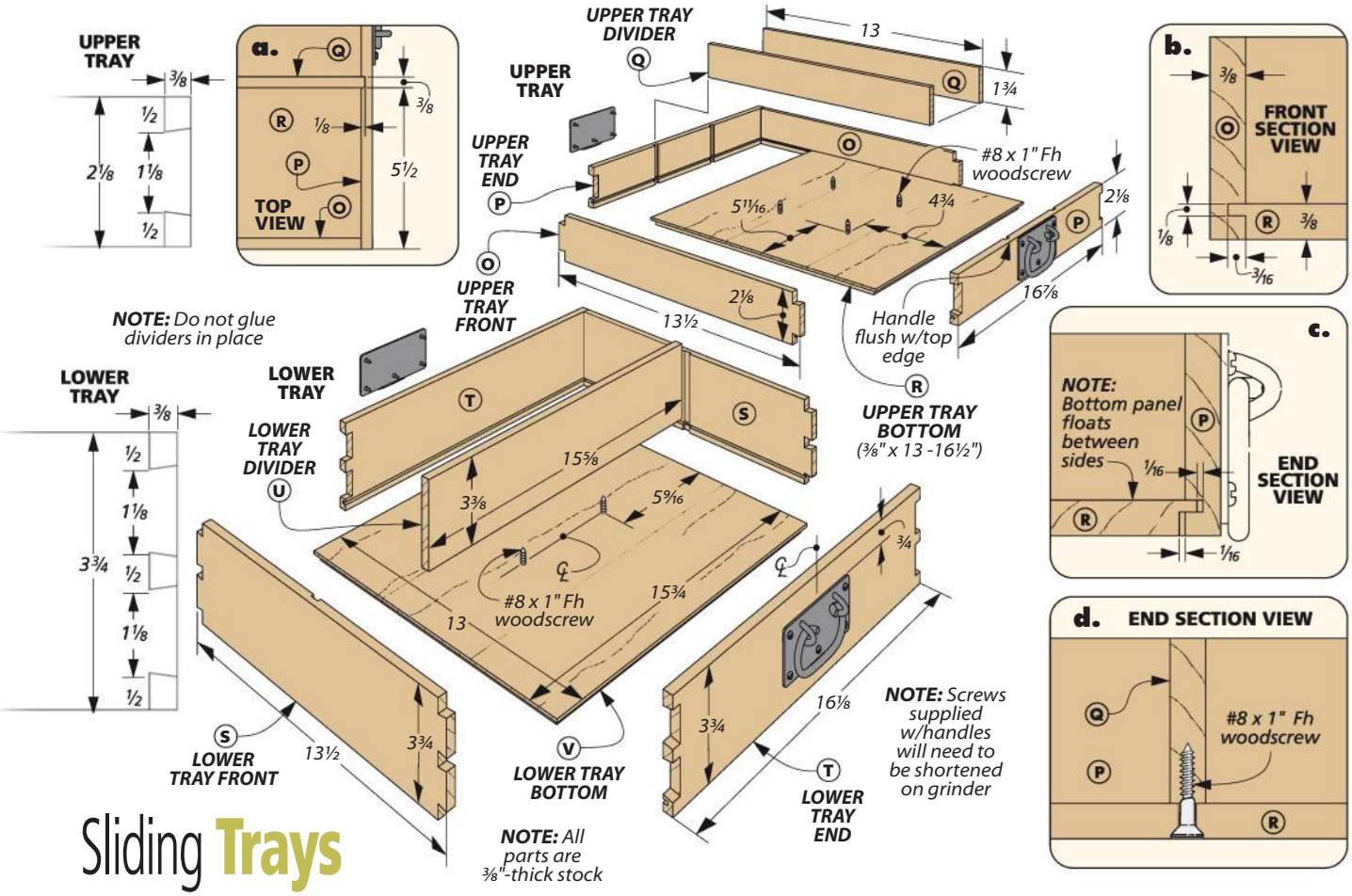


# Sliding Trays

The only thing that remains is to add a couple of sliding trays and the hardware. If you take a look at the drawing above, you'll find the two trays are each a different size. The upper tray is for small tools that might get lost easily. The lower tray is a deeper for larger tools that you want to keep protected but still close at hand.

You'll also notice that the lower tray is a little bit shorter from front to back than the upper tray. The reason for this is simple. The lower tray has to be shorter in order to allow you to lift it out past the runners for the upper tray.

**DOVETAILS.** Aside from these differences, the construction of the two trays is more or less the same. Each one consists of a front, back, and two ends joined together with dovetail joints. The lower tray uses two dovetails at each corner while the pieces for the upper tray are joined with just a single dovetail. Since there are a lot fewer dovetails to make than on the case of the tool chest, you

# Final Details

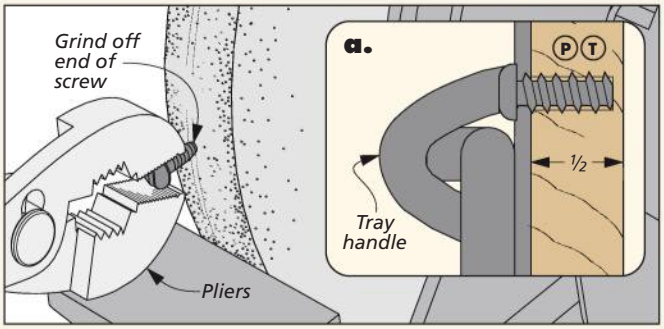


**A Real Grind.** The screws that were supplied with the handles I used on the trays were a bit too long for the thickness of the stock I was using. So I carefully ground down the end of each screw.

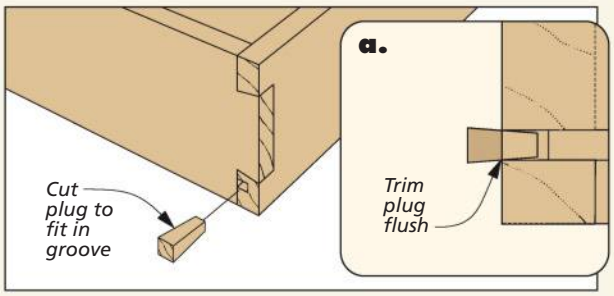


**Plug the Grooves.** To conceal the ends of the grooves for the tray bottoms, I glued a small tapered plug into the end of each groove. Then after trimming the plug with a hand saw, I sanded it flush.

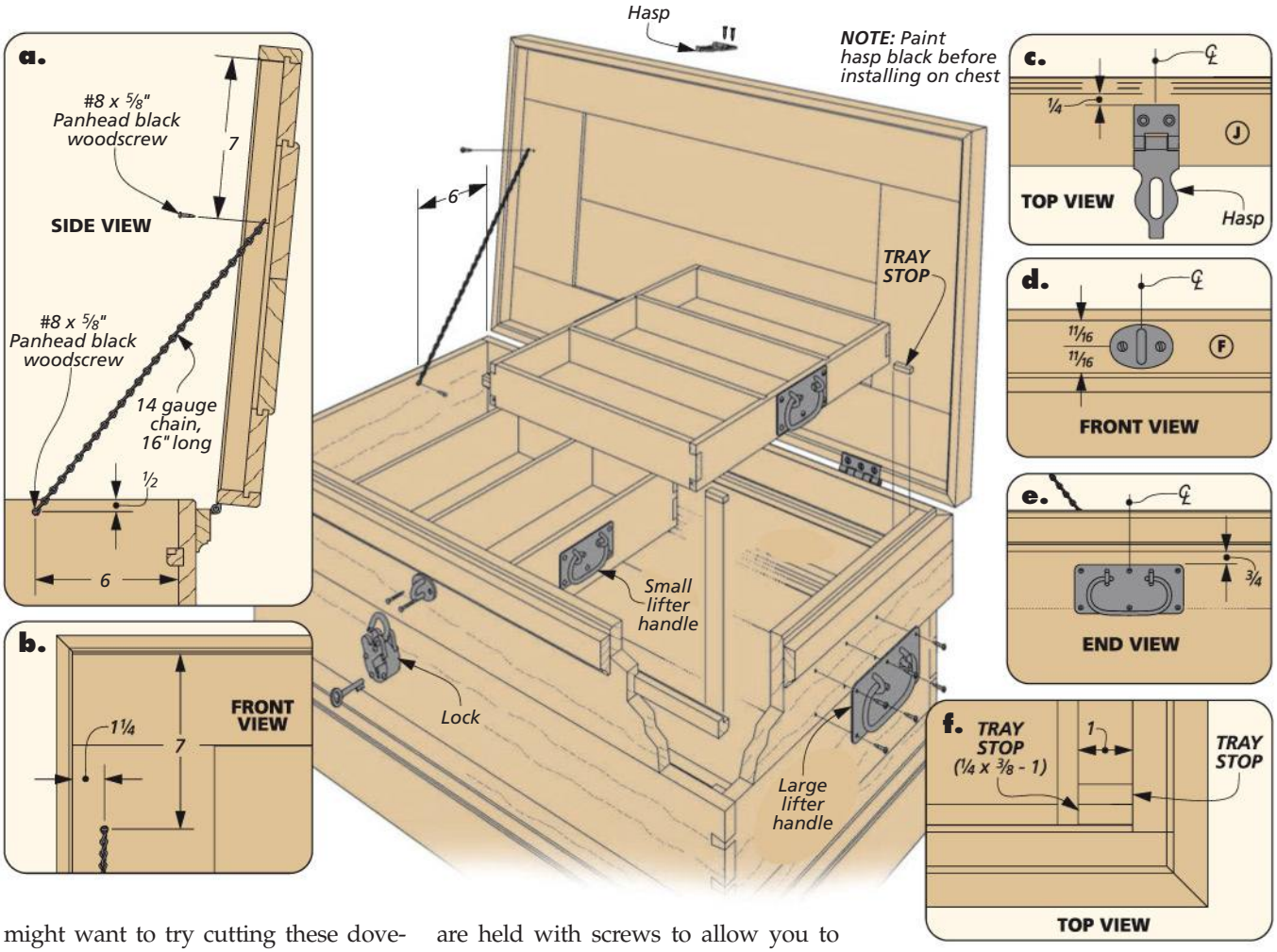


might want to try cutting these dovetails by hand instead of using a jig.

After making the joints, the next step is to cut grooves for the tray bottoms and dadoes for the tray dividers. Details 'a' and 'b' on the opposite page will give you more information on these.

**TRAY BOTTOMS.** Like the other parts of the tool chest, the tray bottoms are glued up out of solid wood. When sizing these pieces, I again allowed for 1/16" clearance gap along the edges for wood expansion. Once the bottoms are cut to size, a tongue is cut on all four edges to match the grooves in the tray pieces, as shown in detail 'c' on the opposite page.

**DIVIDERS.** The last pieces to make before assembling the trays are the dividers. These are simply cut to fit between the dadoes in each tray.

**ASSEMBLY.** Assembling the trays is simply a matter of gluing up the pieces around the tray bottoms. The tray bottoms don't get glued in place — they are allowed to "float" in the grooves. Likewise, the dividers aren't glued in place either. They are held with screws to allow you to remove them.

Before moving on to the hardware, there are a couple of details left. First, I plugged the exposed ends of the grooves for the tray bottom. To prevent the trays from bumping against the ends of the chest, and to create some clearance to lift the trays out of the chest, I added stops to the ends of each runner. These are just small blocks of wood that are sized to fit in the rabbets and then glued in place. You can see them above and in detail 'f.'

**HARDWARE.** One of the things that really makes this tool chest stand out is the authentic-looking hardware. As soon as I applied a finish to the chest, I began installing the hardware, (shown above).

First attach the lifter handles to the ends of the chest and trays (detail 'e' and the box at the bottom of the last page). Next, mount the lid by installing the hinges and the lid chain (details 'a' and 'b'). Finally, add the hasp and padlock to the front of the chest (details 'c' and 'd').

## Optional Tool Holders

The underside of the lid of the tool chest is the perfect place for storing a couple hand saws (or any other flat tool). To hold the saws securely and prevent them from rattling around, I added some customized tool holders (shown in the photos below).

# Heirloom Tool Chest

Striking veneer is combined with simple plywood construction to create a home for your fine tools.

# Construction Details

**OVERALL DIMENSIONS:**
26" W x 14½" H x 14¾" D (Tool Chest)
27⅝" W x 47¾" H x 15" D (Tool Chest & Stand)

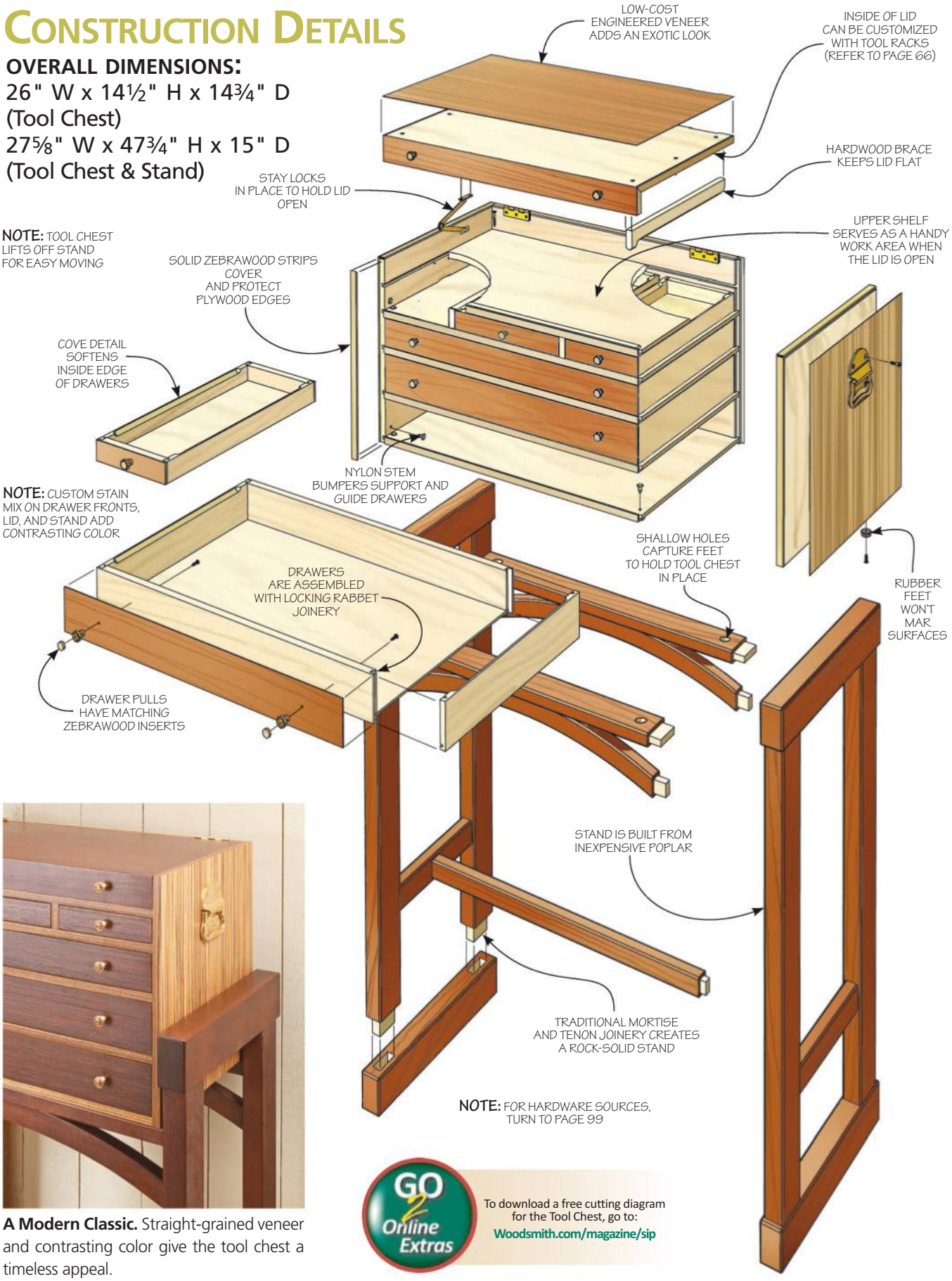




**A Modern Classic.** Straight-grained veneer and contrasting color give the tool chest a timeless appeal.

GO 2 Online Extras

To download a free cutting diagram for the Tool Chest, go to: Woodsmith.com/magazine/sip

# Easy-to-Build **Case**

The veneer on the tool chest gives it a great look. But it starts with an easy-to-build case with a lot of storage inside. (You'll add the veneer later.) The case holds six drawers. Flipping up the lid reveals a handy tool rack and small shelf for keeping frequently used tools close at hand but off your workbench.

**SIMPLE MATERIALS & JOINERY.** To minimize the weight, and maximize space inside, the case of the tool chest is made from ½" plywood. And it's assembled with straightforward joinery.

Creating the case begins with cutting the sides and back of the case to the sizes shown in Figure 1. Along with the shelves, they create openings for the drawers and the upper shelf. To do this, you need to cut a series of dadoes across the sides and back. The dadoes can be cut at the table saw with a dado blade. Figure 1 shows the locations for each of the five dadoes. And you can find the size of the dadoes in Figure 1b.

While I was at the table saw, I cut the joinery that connects the sides and back to each other. I cut a rabbet along the back edge of each side. Then, I cut a mating rabbet on each end of the back panel. You can see how this works in Figure 1c. This joint adds a lot of glue surface and helps register the parts during assembly.

**SHELVES.** You'll want to hold off on assembly for now. That's because you need to make the shelves first. These panels are all the same size, but some have a few added details (which I'll mention in a little bit).

After cutting the panels to size, I cut a rabbet on each end and the back edge to fit the dadoes in the sides and back pieces, as you can see in Figure 1b.

That's all the joinery you need to cut on the lower three panels. The upper two shelves have additional dadoes cut from front to back to accommodate short, vertical dividers. These create smaller openings for the upper three drawers of the tool chest. The dimensions for the dadoes are in Figures 1a and 1b.

**SHORT DIVIDERS.** Before assembling the case, I cut the dividers to size and cut a tongue on the upper and lower edges to fit the dadoes in the upper shelves.

The final detail to complete is to drill holes for stem bumper glides that center and support the drawers, as shown in Figures 1, 1a, and 1b. There's one thing I want to mention about installing the bumpers. I trimmed the bumpers in the vertical dividers so they wouldn't interfere with each other, as illustrated in Figure 1b.

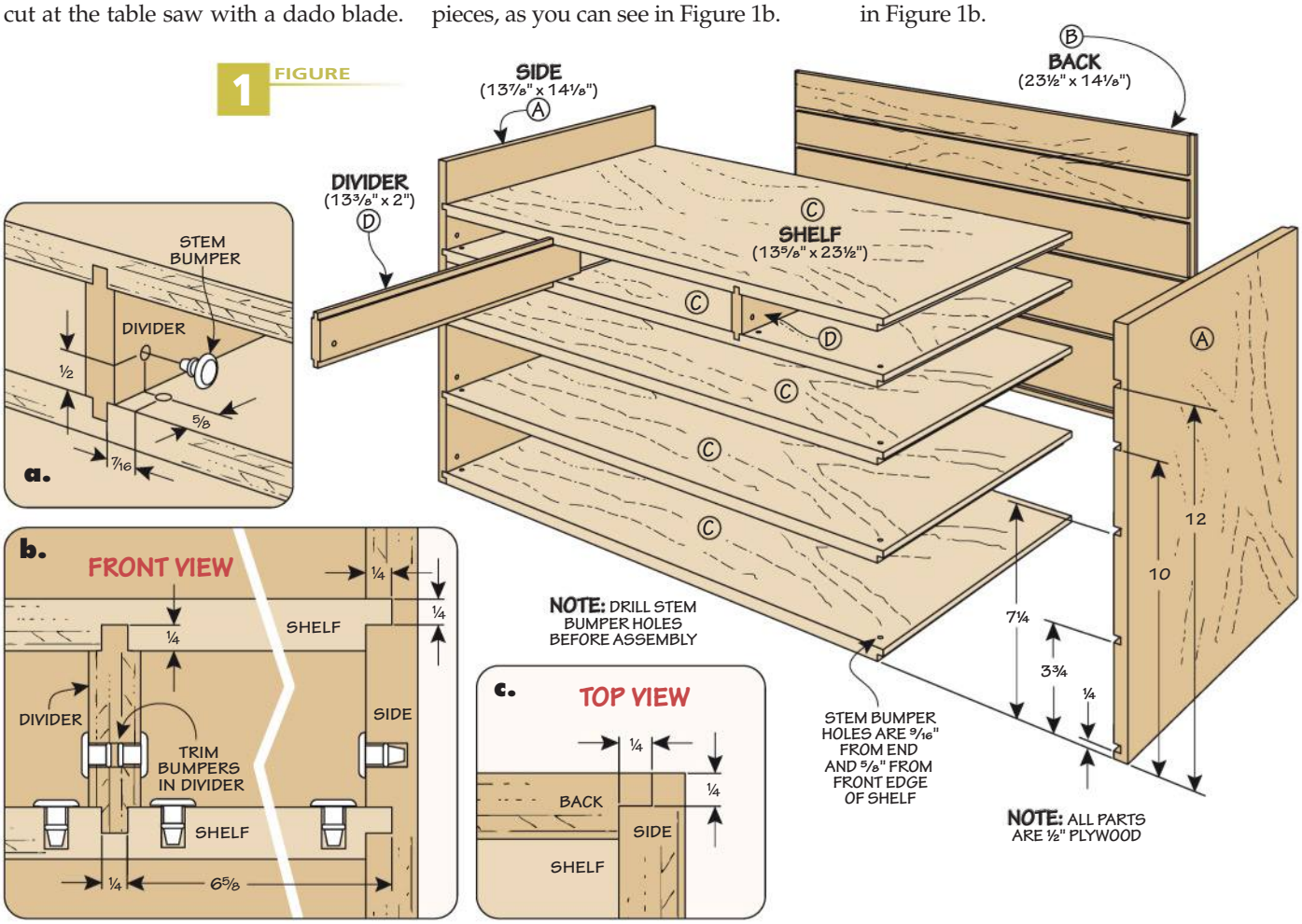

**CASE ASSEMBLY.** The case can be assembled at this point. There are a lot of parts that have to go together at once, so it's a good idea to use slow-setting glue and do a dry run to get your clamps ready.

When you're ready, set the back of the case on the workbench and set one of the sides in place. Then, sandwich the dividers between the upper shelves and fit them into the case side and back. After adding the remaining shelves, glue and clamp the other side in place.

**HARDWOOD EDGING.** That completes the main part of the case. The next steps get the case ready for the veneer. I started by adding some hardwood strips to the exposed edges of the case. (Note: The edging is applied to the front and top edges only.)

For the most part, applying edging to the case is simply a matter of cutting thin strips to size and gluing them in place, as shown in Figure 2. But there are a couple areas I'd like to highlight.

The edging that wraps around the top edge of the case is mitered at the back corners for a seamless look, as you can see in Figure 2a. Then, at the front of the case, the edging is mitered across the width to meet the edging on the front of the case, as shown in Figure 2a. I like to cut the edging strips just barely wider than the thickness of the plywood.

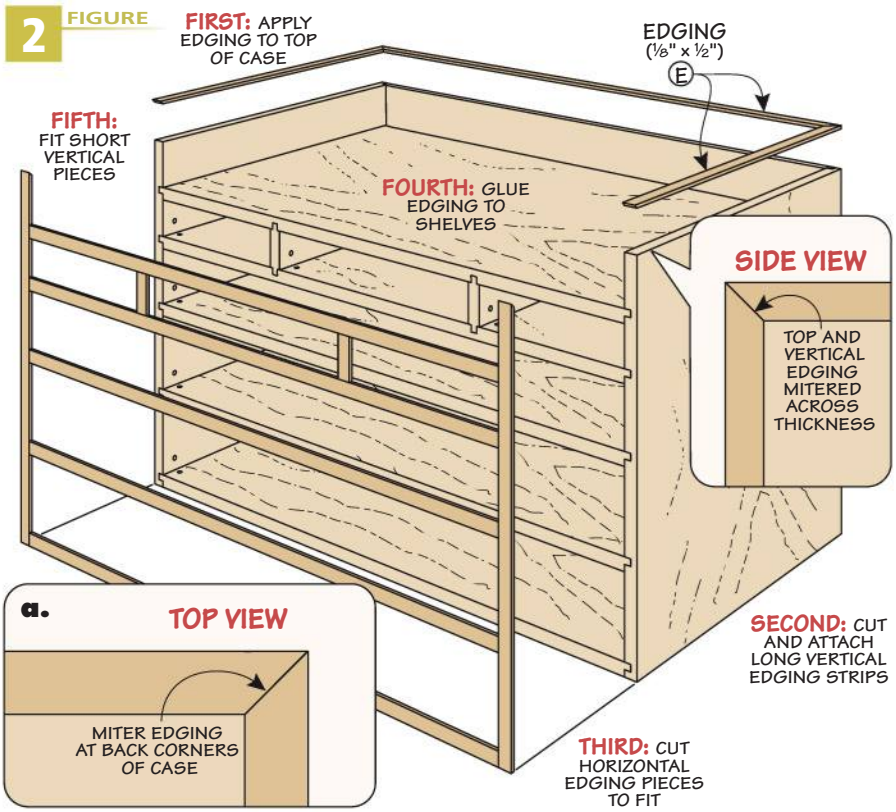


The strips are cut to length and can be held in place with masking tape while the glue dries. Once the glue dries, a few swipes with a sanding block are all it takes to bring the edging perfectly flush with the case.

I glue on corresponding strips of edging in stages. For example, the two long vertical strips go on and are sanded flush before adding the horizontal pieces.

**EASY-TO-APPLY VENEER.** At this point, you can apply the veneer, as shown in Figure 3. I used an engineered veneer that looks like zebrawood. While this offers a unique and pleasant veneer at a low price, any veneer of your choice will work equally well here..

I cut oversized pieces of the veneer and attached them with a spray-on contact adhesive. Apply the back piece of veneer first and trim it flush by routing with a spiral downcut bit, then add the sides. This way, the side pieces extend completely from front to back, preventing any seams in the veneer from being visible.

Once the veneer is trimmed flush, I softened the sharp edges with some sandpaper. This prevents the veneer from chipping.

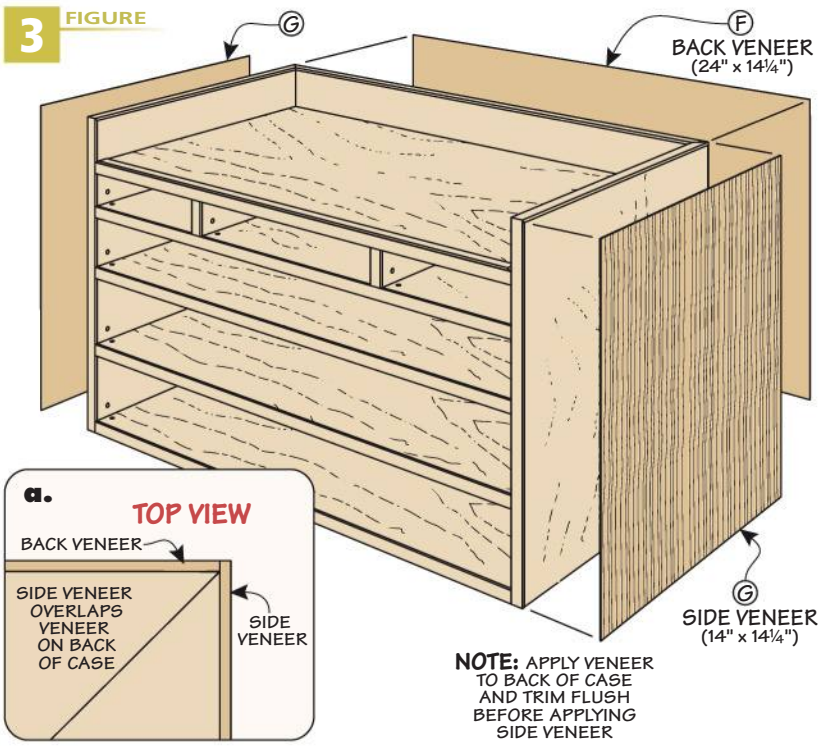

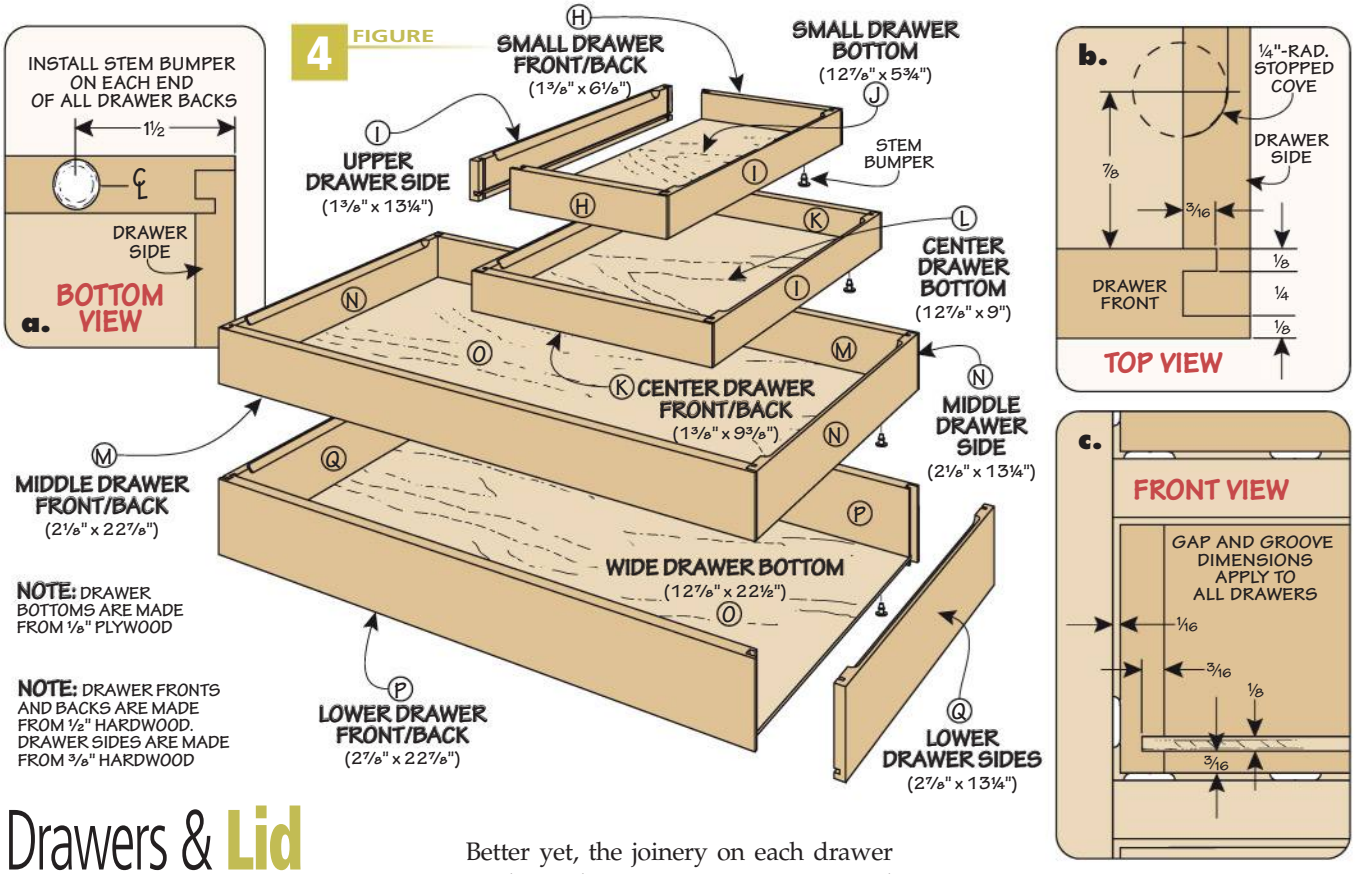


# Drawers & Lid

Completing the case lets you turn your focus to adding the storage inside it. This consists of building the drawers and adding the flip-up lid. I built the drawers first.

**SIMPLE DRAWERS.** The tool chest holds six drawers. However, as you can see in Figure 4, there are only four sizes. Better yet, the joinery on each drawer is identical. So to save some time and extra setups, it's a good idea to cut all the drawer parts to size, first. (Be sure to allow for a 1/16" gap on all sides.) Then, you can cut the joinery for all the drawers at once.

**LOCKING RABBET JOINERY.** A table saw makes quick work of cutting the locking rabbets that connect the front and back to the sides. I'll explain the three-step process I use.

The locking rabbet begins with a groove across each end of the front and back pieces, as shown in Figure 4b. The inside tongue is trimmed back slightly to fit a dado cut in the drawer side.

The third step is to cut the dado near each end of the drawer sides. It's sized to mate with the groove and short tongue on the front and back pieces.

**STOPPED COVE.** Before assembling the drawers, I routed a stopped cove detail along the inside top edge. This detail softens the inside edge of the drawer. I did this at the router table using a cove bit. The process is similar to routing a stopped slot. Set stops at either end of the fence to determine the cove's length, then pivot the piece into the bit at the first stop and rout until you contact the second stop.

**ADD VENEER, TOO.** Once the cove is routed, you can cut a groove in each piece to hold the bottom, as illustrated in Figure 4c. Just like the case, the drawer fronts have veneer added.

The stem bumpers and knobs are the last things to add to the drawers. A

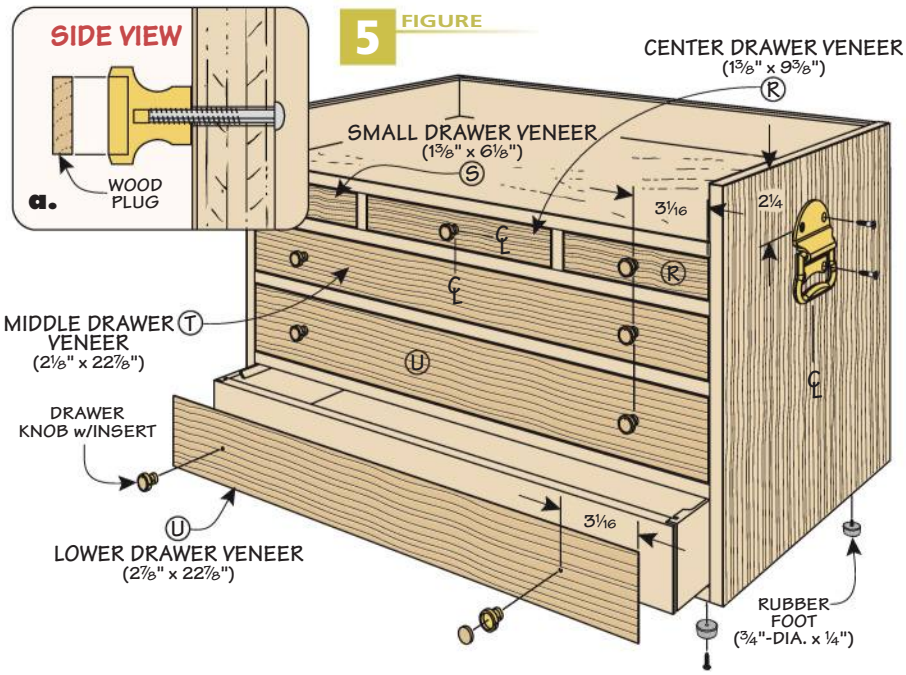

pair of stem bumpers is added to each drawer back to keep the drawer level, as you can see in Figure 4a.

The knobs I used for the drawers are a little unique. The center of each knob has a recess that holds a wood plug that matches the veneer and hardwood used on the project. I created the plugs at the drill press using a plug cutter. A little epoxy holds the plugs in place. Finally, I chucked the knobs in the drill press and sanded the plugs smooth.

**FLIP-UP LID.** The lid at the top of the tool chest does more than simply enclose the case. It's L-shaped to fit between the case sides and flush with the top, as shown in Figure 6a at right. The lid has veneer applied to the top and front face.

The lid starts with two pieces — a top and a front. There are two things to take into consideration as you size these pieces. First, you need to allow for a gap between the lid and case. And you need to factor in the thickness of the edging that will be applied on each side.

The lid top and front are joined with a tongue and groove. A groove at the front edge of the top accepts a tongue cut in the front, as shown in Figure 6a.

**COVER THE EDGES.** Following the joinery, I applied hardwood edging to the bottom edge of the front and the sides of the lid assembly. For cleaner joint lines, I mitered the edging pieces, as you can see in Figures 7 and 7a.

**HARDWOOD BRACES.** Before adding the veneer, I made a pair of braces to stiffen the lid and keep it from cupping. The braces are made from the same zebrawood as the edging. After sawing and smoothing the profile, I routed a cove along the lower edges (Figure 6b).

The braces are secured to the lid with glue and screws. The screws are driven through the lid top and into the cleat. To keep the screw holes from telegraphing through the veneer, I filled the holes and sanded them flush. Now you can apply veneer to the top and front face of the lid pieces.

A pair of hinges and a lid stay allow the lid to open smoothly and keep it in the open position. The hinges rest in mortises cut in the back of the lid (Figures 6 and 6a).

The lid stay needs to be attached in just the right position to allow the lid to open and lock in place.

Finally, I stained the drawer fronts and lid. I used a custom mixture consisting of equal amounts of Java and Georgian Cherry gel stains from *General Finishes*.

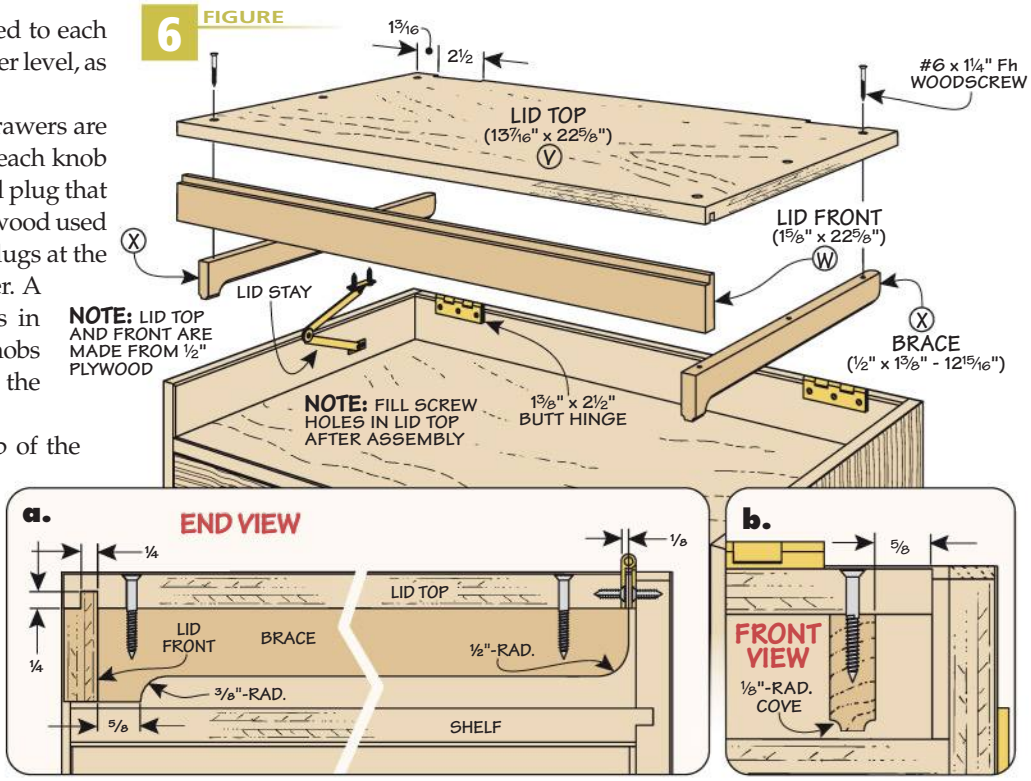


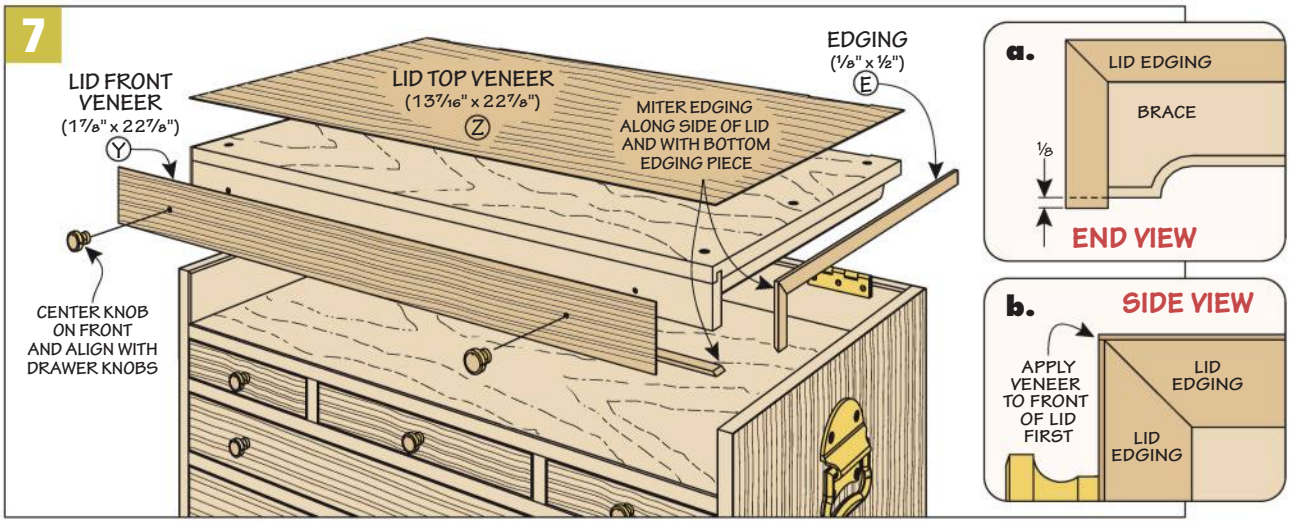

# Custom Tool Racks

With the lid open, the upper part of the tool chest makes a handy shelf for holding tools. This also exposes the underside of the lid, which creates a perfect place for adding a couple tool racks for storing (and displaying) some of my favorite hand tools.

**CHISEL RACK.** The chisel rack is made up of two parts. The upper rail is drilled and notched to hold the ferrules of my chisel set. The lower rail is simply notched to accept the blades. Magnets glued into counterbores in the lower rail keep the chisels firmly in place.

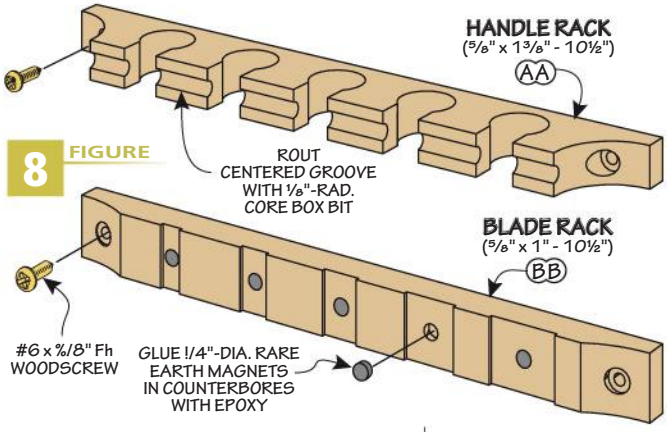


8 FIGURE

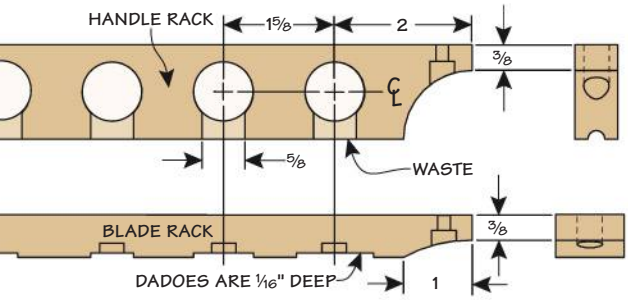


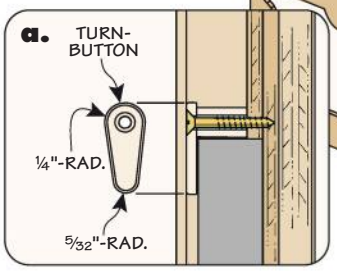


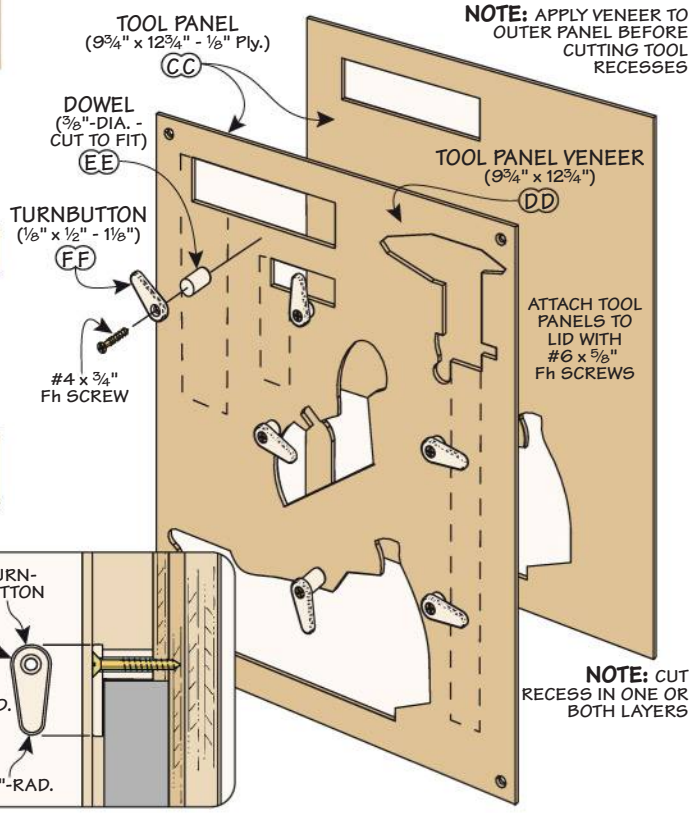


## MATERIALS & SUPPLIES

| | | |
|---|---|---|
| A | Sides (2) | 13 7/8 x 14 1/8 - 1/2 Ply. |
| B | Back (1) | 23 1/2 x 14 1/8 - 1/2 Ply. |
| C | Shelves (5) | 13 5/8 x 23 1/2 - 1/2 Ply. |
| D | Dividers (2) | 13 3/8 x 2 - 1/2 Ply. |
| E | Edging (1) | 1/8 x 1/2 - 235 (rgh.) |
| F | Back Veneer (1) | 24 x 14 1/4 |
| G | Side Veneers (2) | 14 x 141/4 |
| H | Small Dwr. Frt./Bk. (4) | 1/2 x 1 3/8 - 6 1/8 |
| I | Upper Dwr. Sides (6) | 3/8 x 1 3/8 - 13 1/4 |
| J | Small Dwr. Bot. (2) | 12 7/8 x 5 3/4 - 1/8 Ply. |
| K | Center Dwr. Frt./Bk. (2) | 1/2 x 1 3/8 - 9 3/8 |
| L | Center Dwr. Bot. (1) | 12 7/8 x 9 - 1/8 Ply. |
| M | Middle Dwr. Frt./Bk. (2) | 1/2 x 2 1/8 - 22 7/8 |
| N | Middle Dwr. Sides (2) | 3/8 x 2 1/8 - 13 1/4 |
| O | Wide Dwr. Bttms. (3) | 12 7/8 x 22 1/2 - 1/8 Ply. |
| P | Lower Drawer Frt./Bk. (4) | 1/2 x 2 7/8 - 22 7/8 |
| Q | Lower Drawer Sides (4) | 3/8 x 2 7/8 - 13 1/4 |
| R | Small Drawer Veneers (2) | 1 3/8 x 6 1/8 |
| S | Center Drawer Veneer (1) | 1 3/8 x 9 3/8 |
| T | Middle Drawer Veneer (1) | 2 1/8 x 22 7/8 |
| U | Lower Drawer Veneers (2) | 2 7/8 x 22 7/8 |
| V | Lid Top (1) | 13 7/16 x 22 5/8 - 1/2 Ply. |
| W | Lid Front (1) | 1 5/8 x 22 5/8 - 1/2 Ply. |
| X | Braces (2) | 1/2 x 1 3/8 - 12 15/16 |
| Y | Lid Front Veneer (1) | 1 7/8 x 22 7/8 |
| Z | Lip Top Veneer (1) | 13 7/16 x 22 7/8 |
| AA | Handle Rack (1) | 5/8 x 1 3/8 - 10 1/2 |
| BB | Blade Rack (1) | 5/8 x 1 - 10 1/2 |
| CC | Tool Panels (2) | 9 3/4 x 12 3/4 - 1/8 Ply. |
| DD | Tool Panel Veneer (1) | 9 3/4 x 12 3/4 |
| EE | Dowels (6) | 3/8"-Dia. - Cut to Fit |
| FF | Turnbuttons (6) | 1/8 x 1/2 - 1 1/8 |
| GG | Rails (4) | 1 3/4 x 3 - 15 |
| HH | Legs (4) | 1 1/2 x 2 1/2 - 36 |
| II | Middle Rails (2) | 1 x 2 - 11 1/4 |
| JJ | Upper Stretchers (2) | 1 x 2 1/4 - 26 3/8 |
| KK | Arched Stretchers (2) | 1 x 4 - 26 3/8 |
| LL | Lower Stretcher (1) | 1 x 1 1/2 - 25 7/8 |

- (36) Nylon Stem Bumper Glides
- (11) 5/8"-Dia. Insert Knobs w/Screws
- (2) Chest Handles w/Screws
- (1 pr.) 2 1/2" x 1 3/8" Butt Hinges w/Screws
- (1) Left Hand Lid Stay
- (5) 1/4"-dia. Rare Earth Magnets
- (6) #6 x 1 1/4" Fh Woodscrews
- (4) 3/4" x 1/4" Rubber Feet w/Screws
- (6) #4 x 3/4 " Brass Fh Woodscrews
- (8) #6 x 5/8" Brass Fh Woodscrews
- (2) #8 x 2" Fh Woodscrews

**STORAGE PANEL.** The other rack features custom pockets to hold other hand tools. It consists of two pieces of 1/8" plywood and a layer of veneer. Depending on the size of the tool, you may need to cut the recess into one or both layers of plywood, as shown in Figure 8. The tools are held in place with thin, maple turnbuttons.

## STRONG & STURDY STAND

Once the tool chest is complete, you need a place to put it. Rather than take up valuable bench space, I made a complementary stand. The stand is made from poplar and stained the same color as the drawer fronts and lid.

You can see in Figure 9 that the stand is made up of two identical end assemblies that are joined with a series of stretchers.

**END ASSEMBLIES.** To build the base, begin by cutting the legs, upper rails, and lower rails to size. Mortises in the rails will accept matching tenons in the legs (shown in Figure 9b). I also cut mortises on the inside edges of the legs to accept a middle rail. Finally, there are two mortises cut in the inside faces of the legs to hold the long stretchers.

The next pieces to make are the short middle rails. They have a tenon on each end to fit mortises in the legs. And there's a centered mortise on the inside face of each rail to accept the lower stretcher.

Now, you can assemble. Just be sure to install the middle rail before fitting the legs into the upper and lower rails.

**CONNECTING STRETCHERS.** With the ends assembled, you can use the tool chest to determine the length of the upper stretchers (plus tenons). Allow a little extra space (3/8") so the fit of the chest isn't too snug.

To make the arched stretchers, start with a 4"-wide blank. After cutting a tenon on each end, cut the curved profile on the top and bottom of the rail (Figure 9b). The final piece to make is the lower stretcher. Cut it to size and create the tenons on each end (Figure 9a).

To hold the tool chest in place, I added rubber feet to the bottom and drilled matching shallow holes in the upper rails of the stand. Now you have a handy place to store your tools close by but not on your workbench.

**9** FIGURE

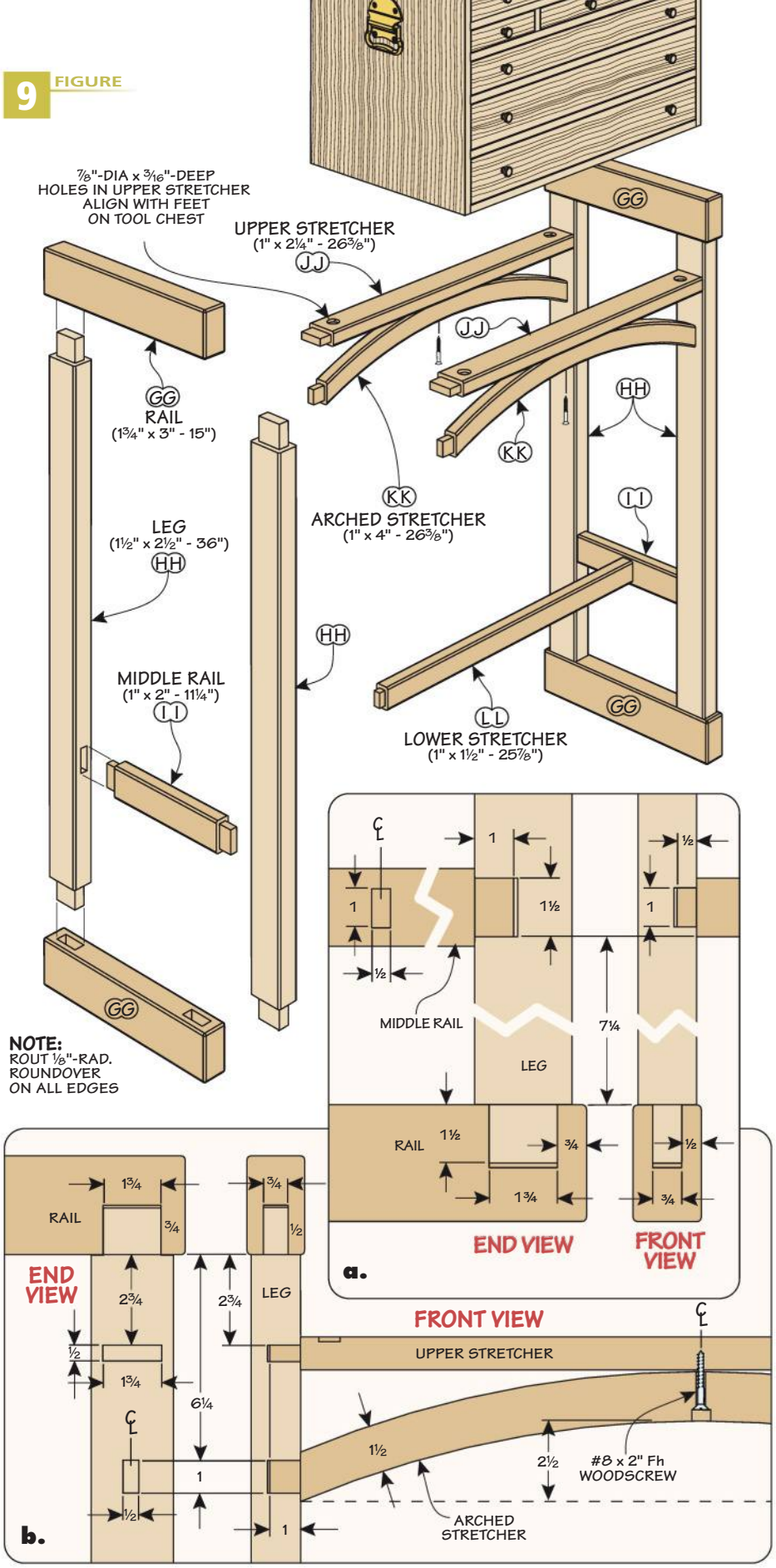

# Wall-Mounted Storage

In shops both big and small, space eventually becomes one of the largest commodities. But, by utilizing vertical space like these projects, you don't need to barter away your floor space for more storage.


PEGBOARD STORAGE SYSTEM .....70

CRAFTSMAN WALL CABINET.....76

CABINETMAKER'S SAW TILL.....84

TAMBOUR TOOL CABINET .....90

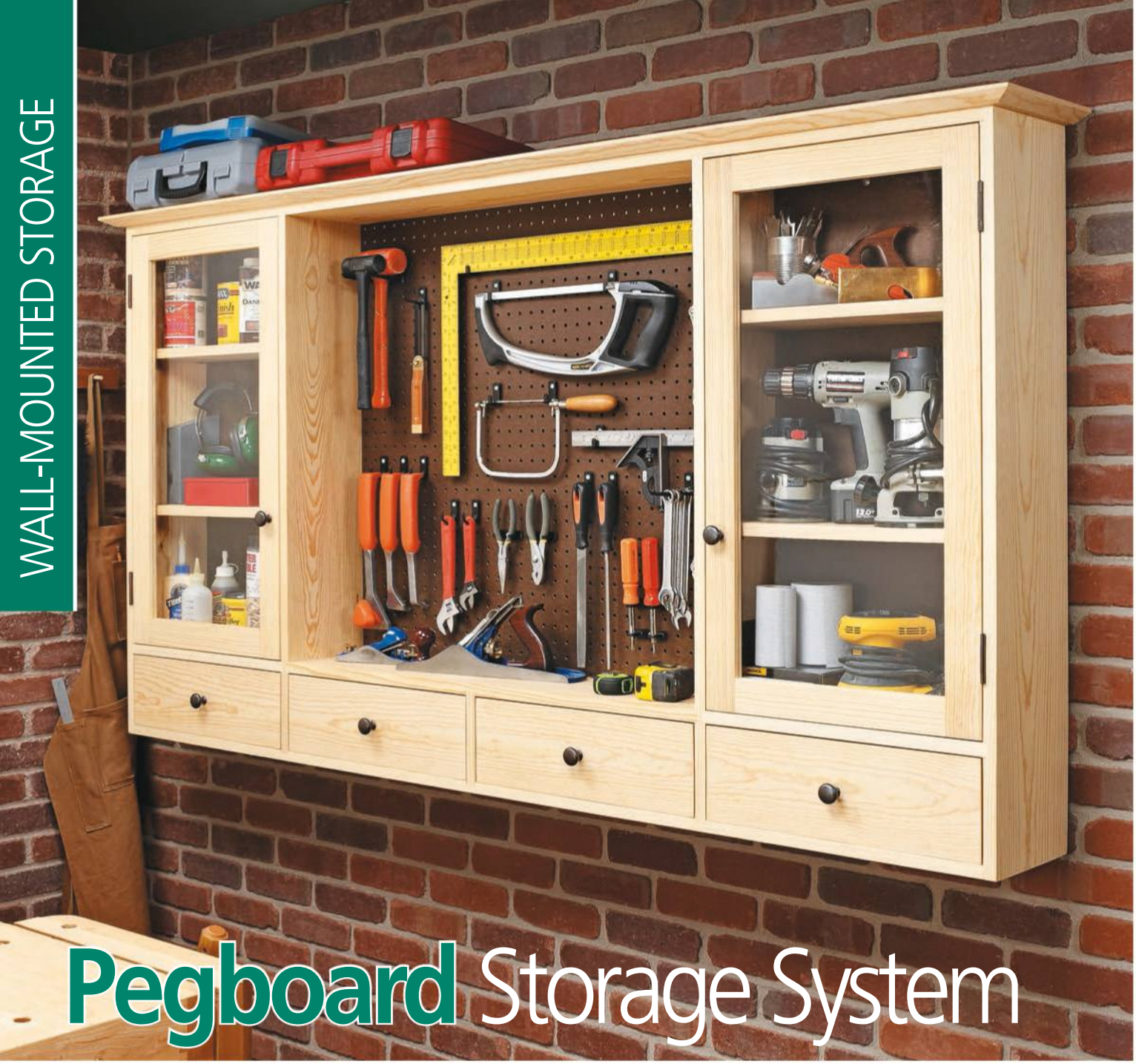

# Pegboard Storage System

Good looks and strong, simple joinery combine to create a lot of practical storage for your tools.

Based on quite a few of the comments from *ShopNotes* readers throughout the past, storage solutions are some of our most popular projects. And the tool cabinet you see above is sure to be a winner in that regard.

The adjustable cabinet shelves, drawers, and pegboard panel provide plenty of storage options. The cabinet starts with tongue and dado joinery for the case construction. Dadoes join the dividers and fixed shelves to the case. What you end up with is a rock-solid cabinet.

Storage cubbies along the bottom accommodate drawers or a row of plastic bins, as you can see in the photo on the opposite page. Either option provides plenty of storage for your smaller tools and miscellaneous hardware.

A pair of doors with acrylic panels finish off the cabinet. They allow you to quickly locate your tools while keeping out the dust. With its ample space and solid construction, this cabinet is sure to be a worthy addition to any wall in your shop.

# Construction Details

**OVERALL DIMENSIONS:**
71¾" W x 40" H x 10" D

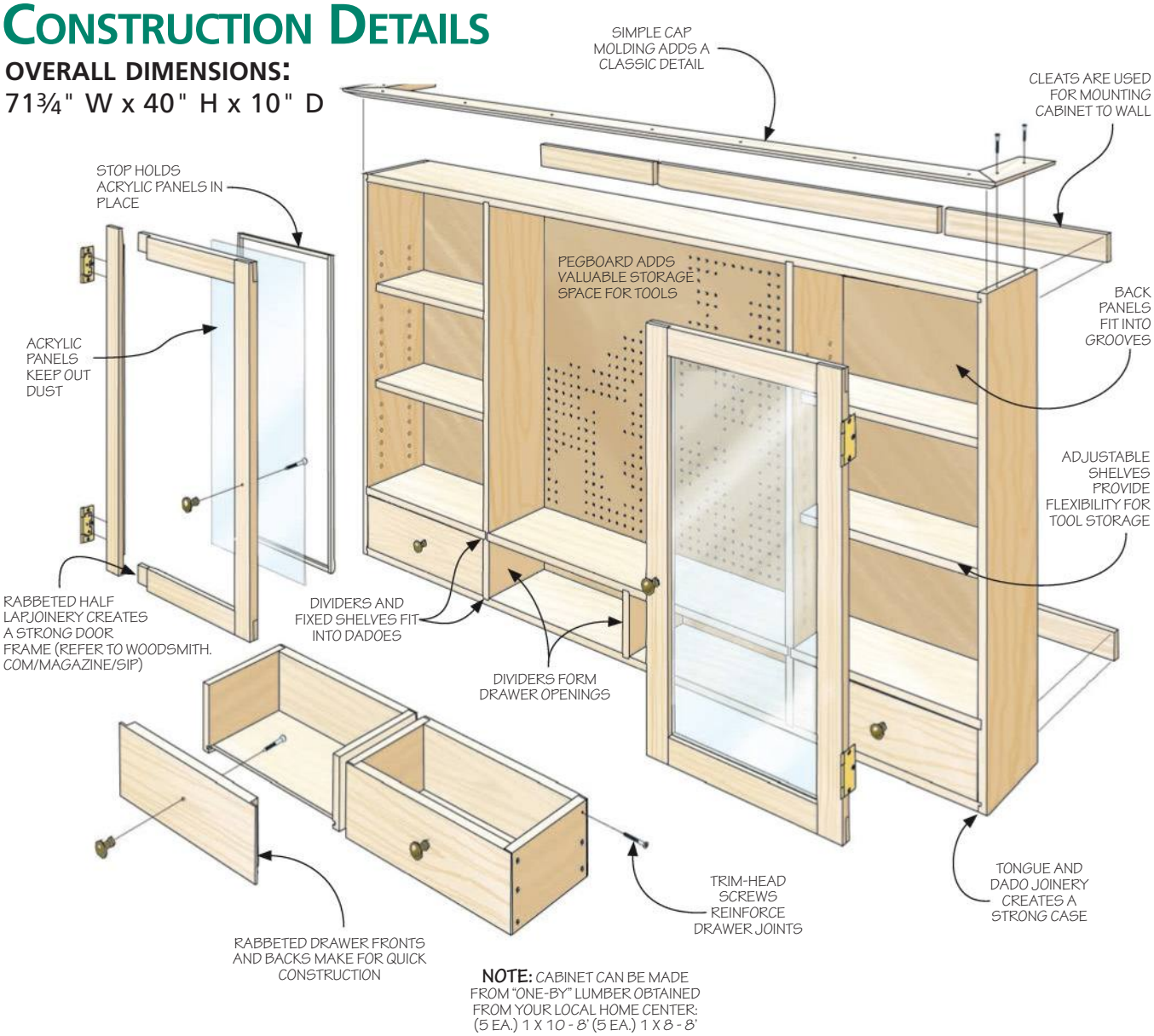


**NOTE:** CABINET CAN BE MADE FROM "ONE-BY" LUMBER OBTAINED FROM YOUR LOCAL HOME CENTER: (5 EA.) 1 X 10 - 8' (5 EA.) 1 X 8 - 8'

## MATERIALS & SUPPLIES

| | | |
|---|---|---|
| A | Top/Bottom (2) | ¾ x 8½ - 70¾ |
| B | Long Dividers (2) | ¾ x 8½ - 38¼ |
| C | Center Shelf (1) | ¾ x 8½ - 35¼ |
| D | Center Divider (1) | ¾ x 7½ - 6 |
| E | Pegboard (1) | 32 x 35¼ - ¼ Pgbd. |
| F | Center Panel (1) | 6 x 35¼ - ¼ Hdbd. |
| G | Sides (2) | ¾ x 8½ - 39¼ |
| H | Fixed Shelves (2) | ¾ x 7½ - 17½ |
| I | Adjustable Shelves (4) | ¾ x 6½ - 16⅞ |
| J | Cabinet Backs (2) | 17½ x 38¼ - ¼ Hdbd. |
| K | Short Cleats (4) | ¾ x 2½ - 17 |
| L | Long Cleats (2) | ¾ x 2½ - 34¾ |
| M | Cap Molding (1) | ¾ x 3 - 96 rgh. |
| N | Door Stiles (4) | ¾ x 2 - 31⅜ |
| O | Door Rails (4) | ¾ x 2 - 16⅞ |
| P | Door Panels (2) | 13½ x 28 - ⅛ Acrylic |
| Q | Stop (1) | ¼ x ⅜ - 221 rgh. |
| R | Drawer Fronts/Backs (8) | ¾ x 5 7/16 - 16⅞ |
| S | Drawer Sides (8) | ¾ x 5 7/16 - 7¼ |
| T | Drawer Bottoms (4) | 6½ x 15⅞ - ¼ Hdbd. |

- (27) #8 x 1¼" Fh Woodscrews
- (6) ½"-Dia. Knobs
- (2 pr.) 1½" No-Mortise Hinges
- (2) Magnetic Catches
- (16) ¼" Shelf Pins
- (48) #8 x 1¼" Trim-Head Woodscrews
- (28) ¾" Brads
- (16) 7⅜"L x 4⅛"W x 3"H Plastic Bins (optional)

**Optional Plastic Bins.** You can skip the drawers and use small bins to create open hardware storage.

**1 FIGURE**

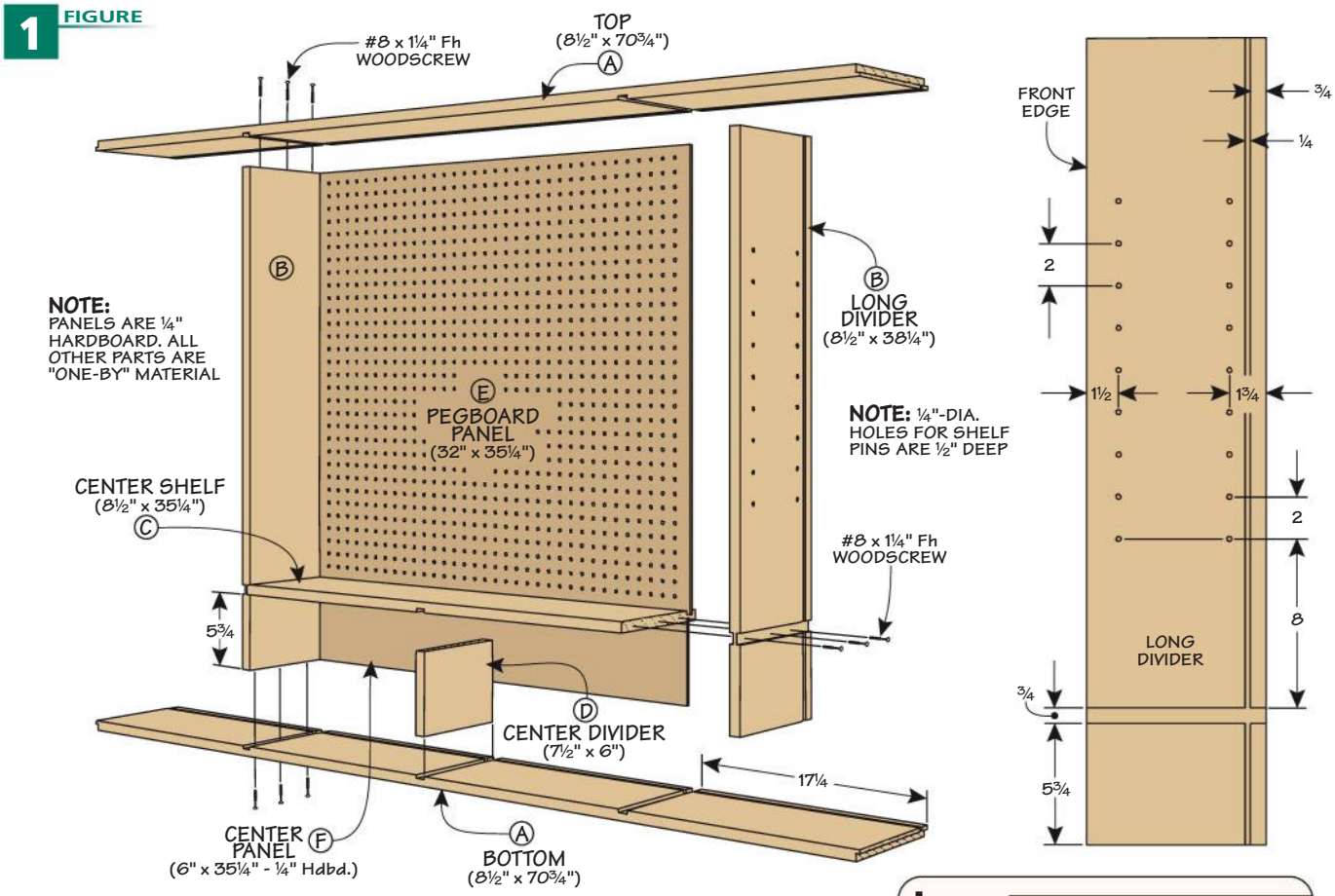


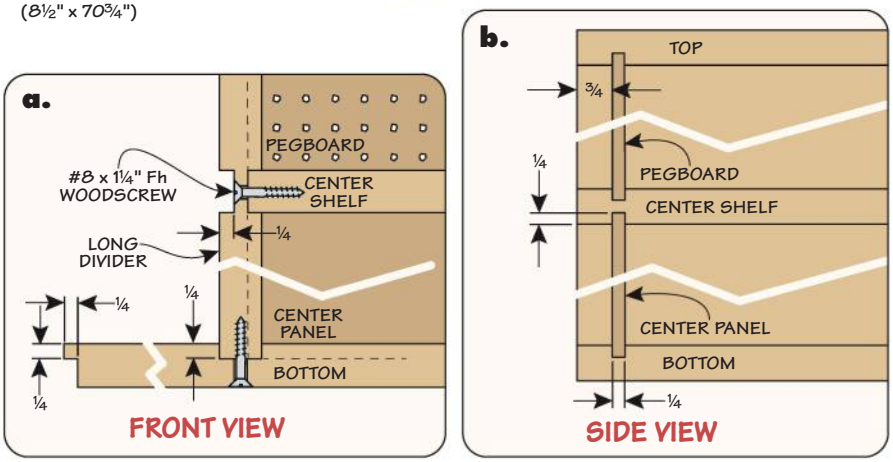


# Making a Strong Case

Most of the components for the tool cabinet are made from 1x10 pine boards. You can usually find these at your local home center. There are a few minor challenges when working with these wide boards, but I'll point out some tips along the way to help you get great results.

**CENTER SECTION.** To build the case for the tool cabinet, it's easier to work from the inside out. In other words, you'll start with the center pegboard section and work your way out to the two side cabinets.

Figure 1 provides all the details to get you going. The key is to locate and cut all of the dadoes for the joinery accurately for a square assembly. To do this, I used the miter gauge with the rip fence acting as a stop. You can cut all of the dadoes at one position before adjusting the fence for the next set.

**SHOP TIPS FOR DADOES.** There are a few tips for cutting the dadoes I want to pass along. The wide boards you're using may have a slight cup from edge to edge. This makes it difficult to cut a dado to a consistent depth across the board. To help with this, I cut the dadoes on the convex side of the board where possible. This way, you can keep the face of the workpiece tight against the table during the cut.

Later, during assembly, if you find the dadoes aren't the same depth across the board, you can use a shoulder plane to even out the dado. You can also use a piece of ¾" stock with adhesive-backed sandpaper attached to the edge to sand the dado to depth.

**TOP & BOTTOM.** I first cut the top and bottom to size. Cutting the outer dado of both pieces using the same setup ensures that they will align during assembly. The bottom also needs a dado in the center for a vertical divider.

You'll need to form a tongue on each end of the top and bottom pieces. The

**2** FIGURE

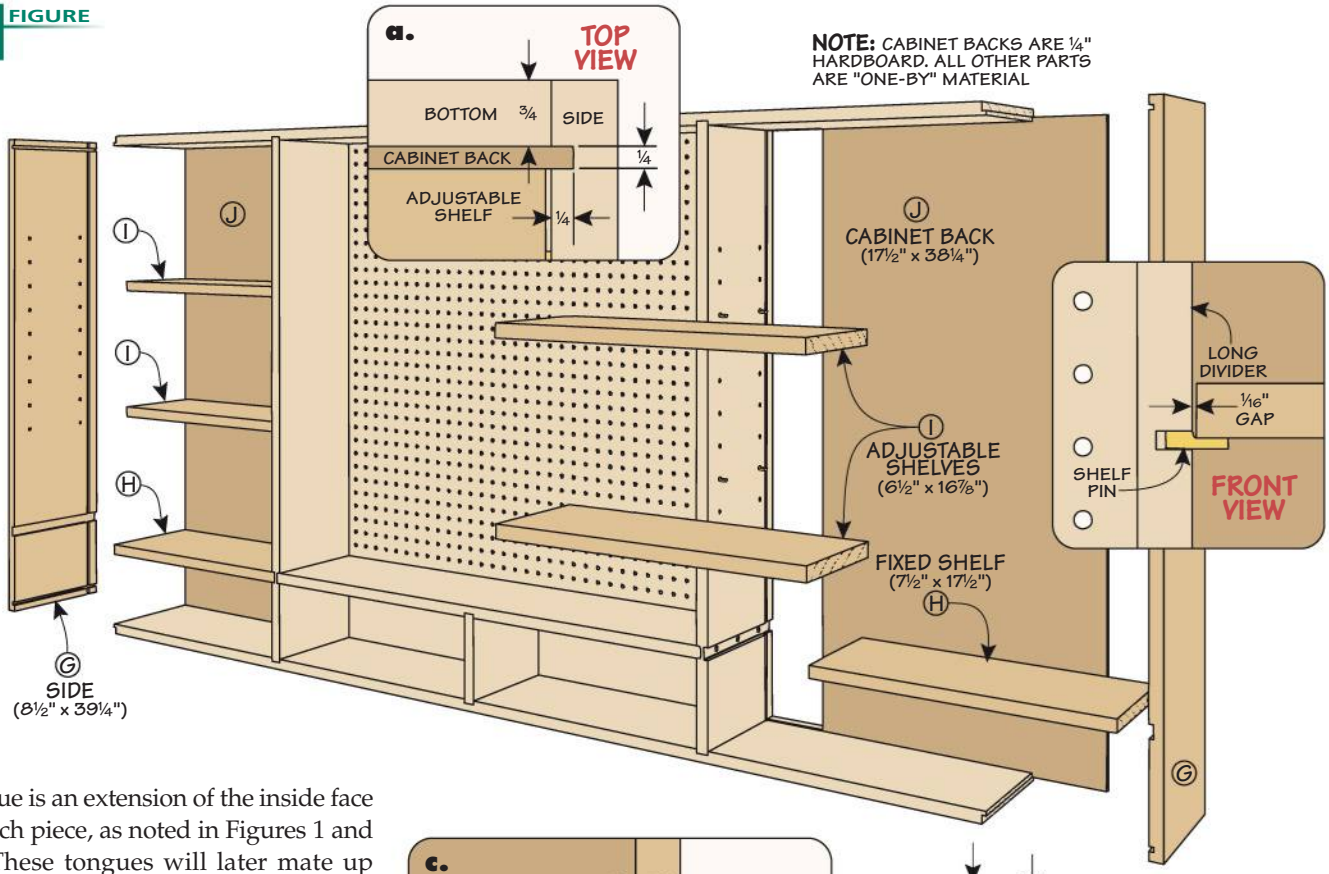


tongue is an extension of the inside face of each piece, as noted in Figures 1 and 1a. These tongues will later mate up with dadoes in the sides.

I cut a groove along the back edge of each piece to hold the pegboard panel. It's located ¾" from the back edge in order to leave room for the mounting cleats that we'll add later.

**LONG DIVIDERS.** A pair of long dividers forms the sides of the two end cabinets and frames the pegboard panel. To accommodate the fixed shelves, you'll cut a dado on both faces, as you can see in Figure 1a. Again, there's a groove along the back edges to hold the back panels.

**SHELF PIN HOLES.** I like to drill the holes for shelf pins before assembly. It's easier to lay them out and drill them. Measure from the top of the shelf dado.

**ASSEMBLY.** I dry-fit these four pieces to determine the dimensions for the center shelf along with the overall size of the pegboard and hardboard panels. With all these pieces at hand, you can assemble this section of the cabinet with glue and screws. Then cut and glue the short center divider in place.

**CABINET SIDES.** The next step is to make the two cabinet sides (Figure 2). For these, you'll cut a pair of dadoes at each end to mate with the tongues on the top and bottom. Dadoes for the fixed shelves align with the dadoes in the long dividers. And you'll need to cut a groove along the back edge as before. When laying out the holes for the shelf pins, remember to measure from the top of the shelf dado so they align with those in the dividers.

**TEST FIT & GLUE.** It's a good idea to do a test run to make sure everything goes together and the joints are tight. You can cut the pair of hardboard panels for the back while you're at it. After everything is square and glued together, you can measure and cut the four adjustable shelves.

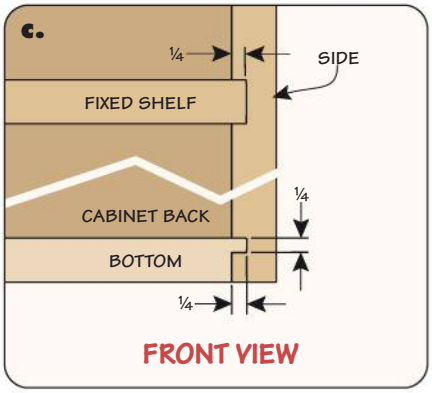


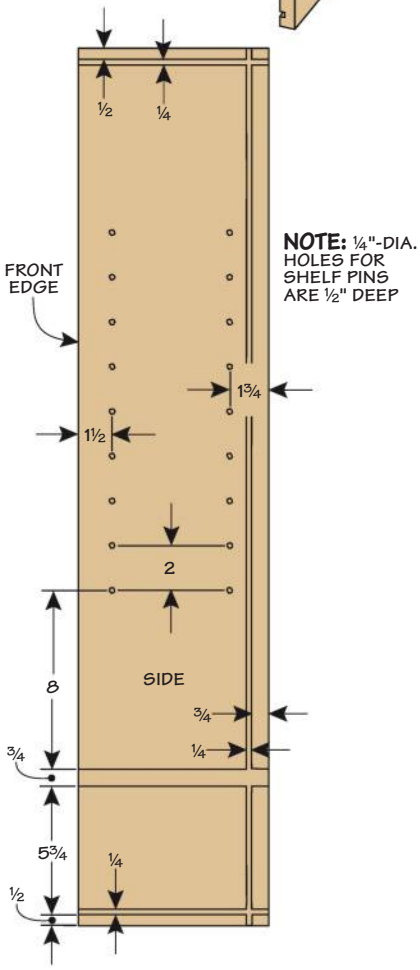

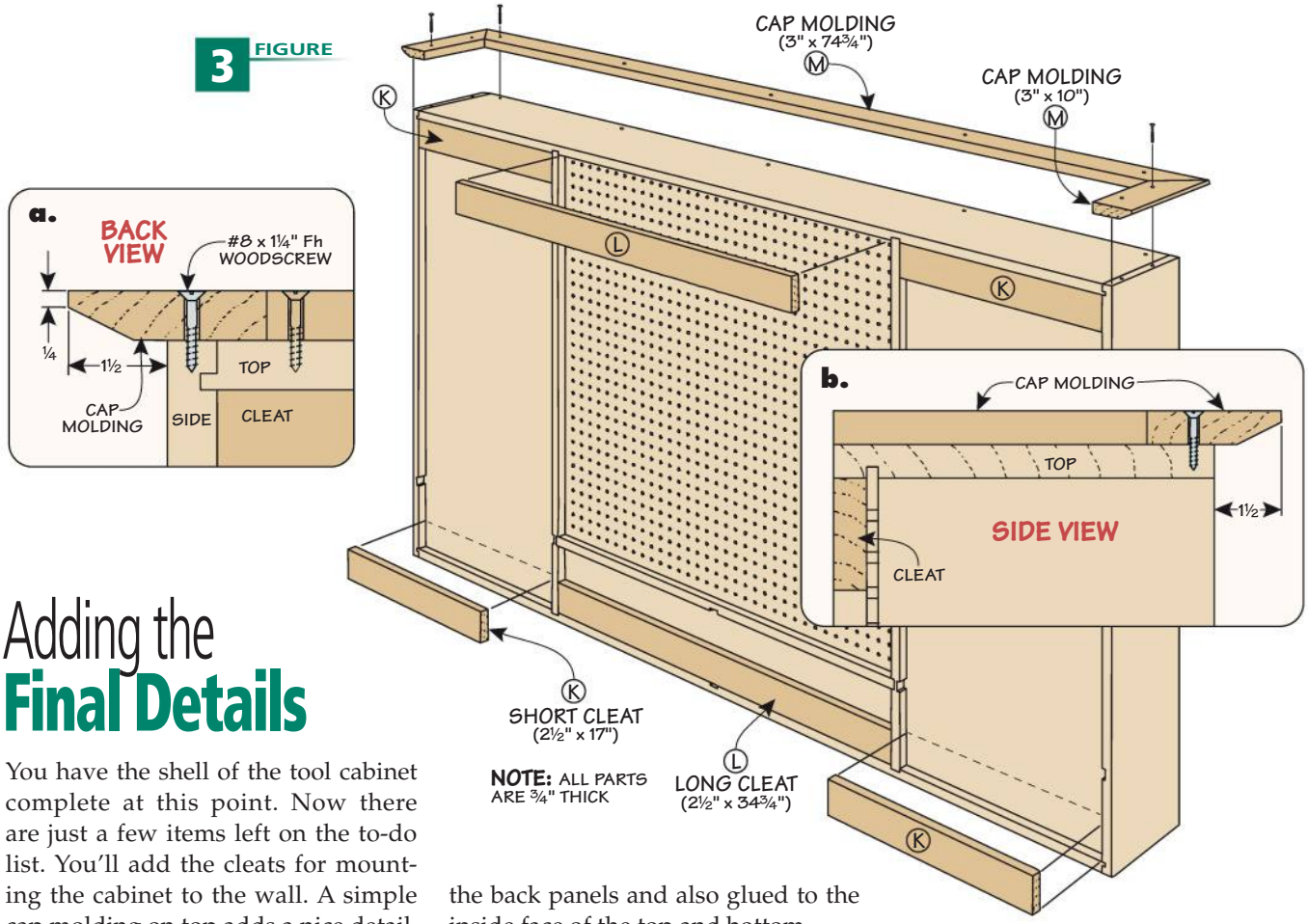


# Adding the Final Details

You have the shell of the tool cabinet complete at this point. Now there are just a few items left on the to-do list. You'll add the cleats for mounting the cabinet to the wall. A simple cap molding on top adds a nice detail. Inset doors with acrylic panels close off the end cabinets and allow you to see your tools. Finally, a set of four drawers offers plenty of storage.

**MOUNTING CLEATS.** Six cleats glued to the back support the cabinet when it's mounted on the wall (Figure 3). They're cut to length and glued to the back panels and also glued to the inside face of the top and bottom.

**CAP MOLDING.** The mitered molding along the top of the cabinet is easy to make (Figures 3 and 3a). You can see how it's done in the box below. Simply rip a bevel on a long blank. To cut the miters, I always start with the mitered pieces a little long and gradually sneak up on a tight fit. I have more success by mitering and installing the front piece first and then cutting the two end pieces and attaching them last.

**RABBETED DOORS.** Next on the agenda is the pair of doors. You can see in Figures 4 and 4a on the next page how the door frames are made using lap joints. I used an interesting technique to create the joinery after the rabbets were cut in the rails and stiles. You can find out more about this joinery method in the article online at *Woodsmith.com/magazine/sip*.

After the joinery is cut on the door frame pieces, the glueup is a cinch. The wide glue surfaces of the lap joints make for a strong frame. And the shoulders help keep the assembly square as you apply the clamps.

**SEE-THROUGH PANELS.** I used acrylic (Plexiglas) for the panels instead of glass. It doesn't break easily, which is a big plus. They allow you to see the contents of the cabinet. And they do a great job of keeping out the dust.

## Cap Molding

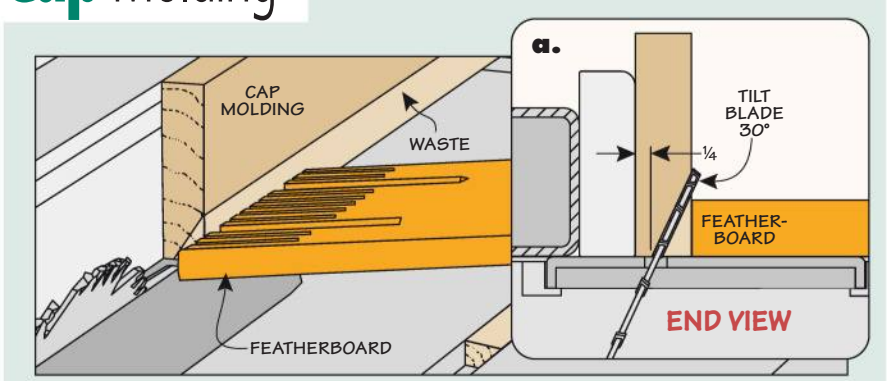


**Ripping a Bevel.** The cap molding is easy to make with a simple table saw setup. Tilt the blade 30° and slide the rip fence over until it's ¼" away from the blade at the table (refer to detail 'a'). Use a featherboard while ripping the bevel.

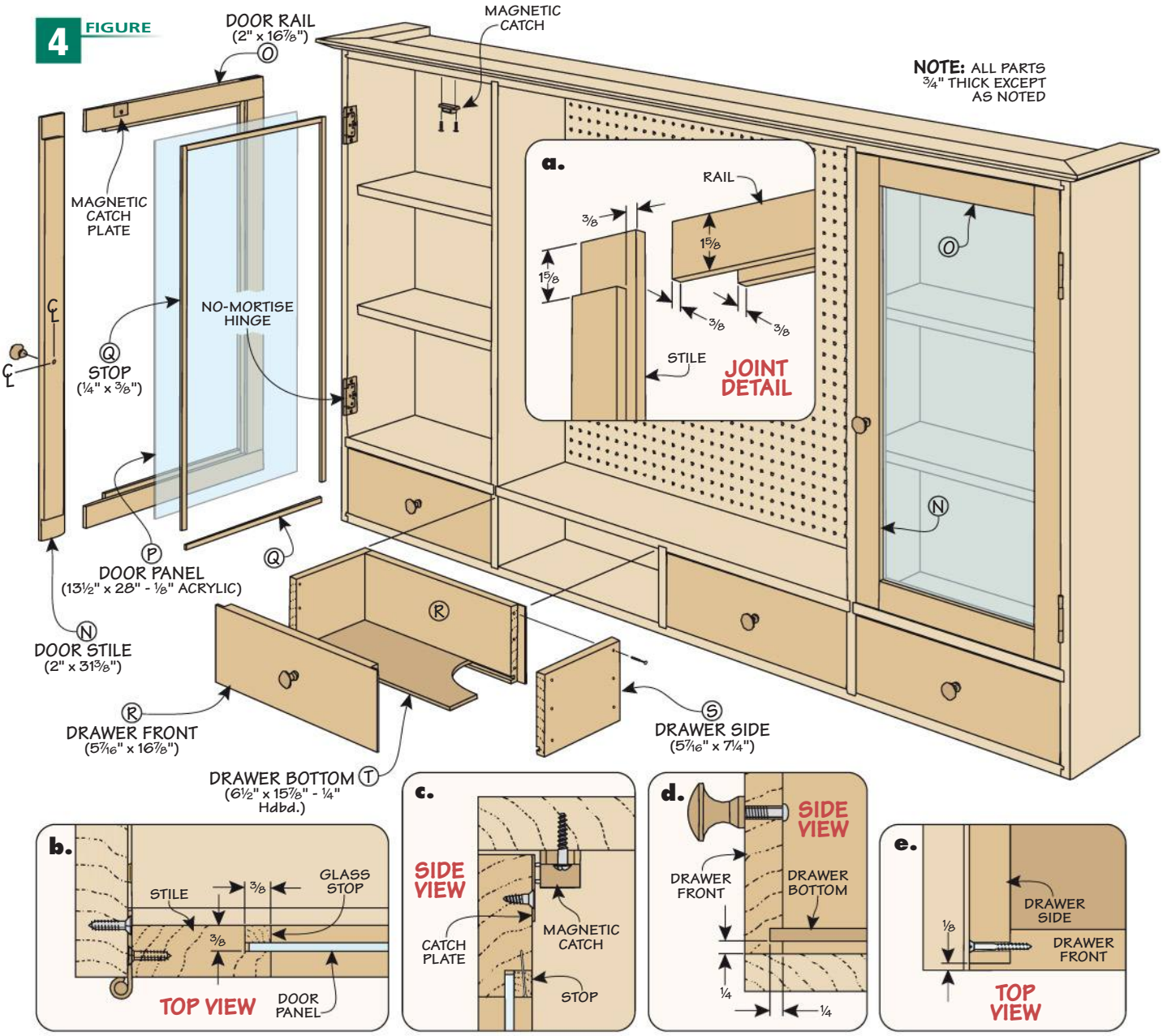


**GLASS STOPS.** You can cut the acrylic to fit the rabbeted frames on your table saw. To hold the panels in place, I ripped thin strips to form glass stop. I used small brads to hold it in place. Figures 4b and 4c show the glass stops installed in the frame.

**DOOR INSTALLATION.** To make installing the doors easier, I used no-mortise hinges. The goal is an even gap around the door. Finish up by installing the magnetic catches (Figure 4c).

**DRAWERS.** The four drawers along the bottom of the cabinet add a lot of storage for small parts and hardware. The best part is, they're easy to build.

The details in Figure 4 you see above provide the specific dimensions you need to know. The drawers are assembled with simple, rabbeted joinery and trim screws. This method makes for quick construction. You can use an "assembly line" production method to make all the parts.

The first step is to select a board with attractive grain that will make up the four drawer fronts. For the best look, the grain should be continuous across all of the drawer fronts. After cutting the drawer fronts and backs to length, cut the rabbets on each. Before cutting the sides to length, you'll need to measure the depth of the drawer opening and subtract the combined thickness of a tongue on the front and back. Your goal is to have the drawer fronts fit flush with the cabinet front after assembly.

Cut a groove for the drawer bottom in all the parts, then assemble the drawers with glue and trim-head screws. After installing the knobs on the drawers and doors, it's time to attach the cabinet securely to your wall.

After the cabinet is mounted, you'll be surprised how much more space you have for organizing tools scattered around your shop.

# Craftsman Wall Cabinet

**Extra Storage.** The four drawers of this cabinet provide extra storage for small items that don't need to live on the shelves, yet still keep them close at hand.

The Craftsman style of furniture is one that's stood the test of time. Even today, you can walk into a furniture store and find examples of this style. So why not bring some of that classic design into your shop? That was the idea behind this Craftsman-style tool cabinet. With beautiful quartersawn white oak, details such as the square plugs, and bold hardware, this tool cabinet not only proudly displays some of your most loved tools, but it also shows off your woodworking skills.

Now, all of that isn't to say that this cabinet can only be used in the shop. In fact, I know many people who would refuse to put a piece of furniture this nice in their dusty shop. I could easily see this cabinet hanging in a home office, entryway, or anywhere else you want to display your prized possessions.

As I alluded to before, the construction of this cabinet uses some traditional joinery techniques. Digging into it, you'll find dado case joinery, haunched mortise and tenons, and locking rabbets. All of these will help hone your woodworking skills. So, let's pour a cup of coffee, step into the shop, and start surfacing some white oak as you begin working on your own tool cabinet.

# Construction Details

**OVERALL DIMENSIONS:**
36" W x 33" H x 12" D

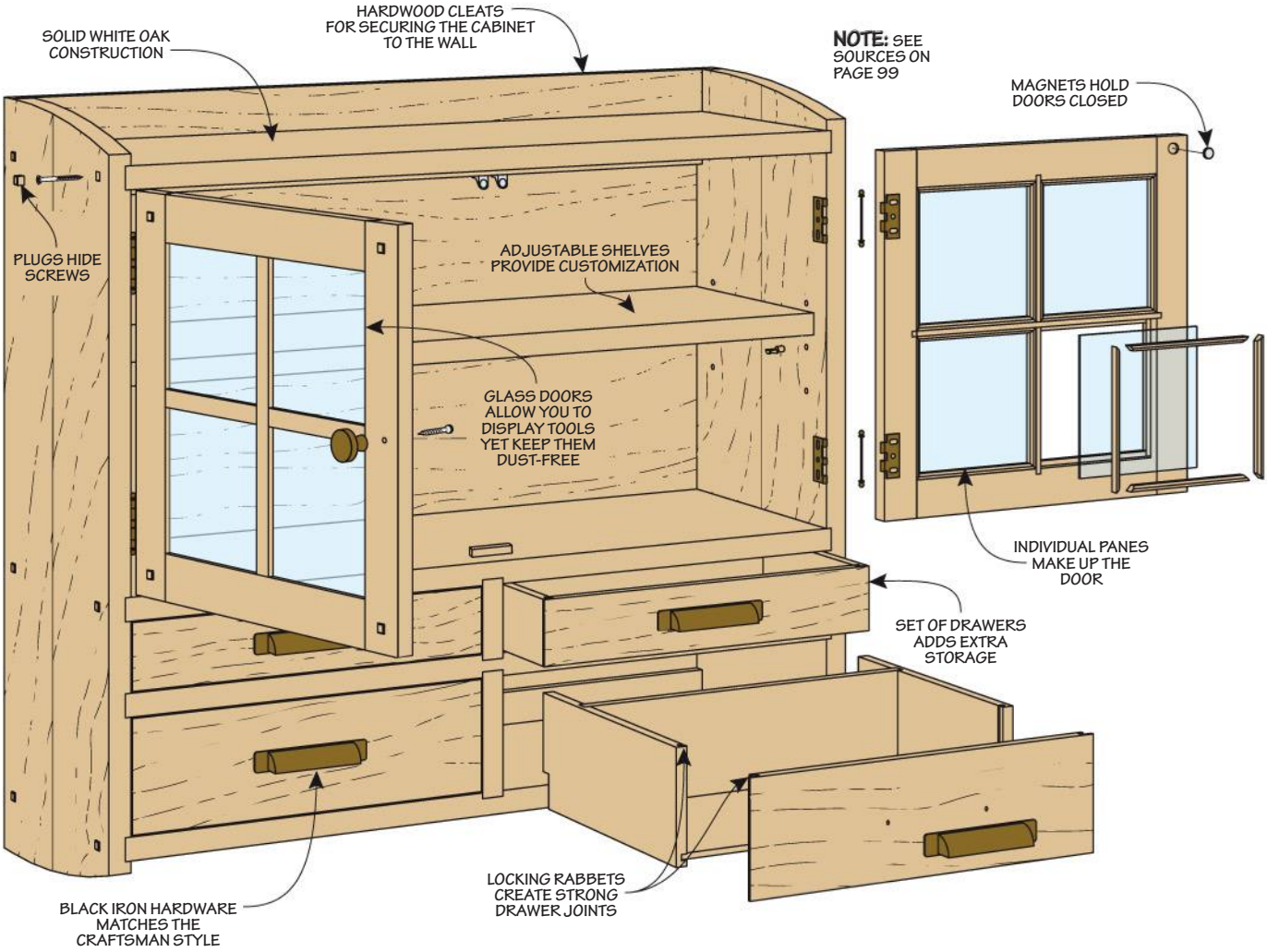


## MATERIALS & SUPPLIES

| | | |
|---|---|---|
| A | Sides (2) | 1 x 12 - 33 |
| B | Bottom/Divider (2) | 1 x 11¾ - 34½ |
| C | Top (1) | 1 x 11¾ - 34½ |
| D | Horizontal Divider (1) | 1 x 11¾ - 34½ |
| E | Top Vertical Divider (2) | 1 x 11¾ - 3½ |
| F | Btm. Vertical Divider (1) | 1 x 11¾ - 5½ |
| G | Cleats (2) | ¾ x 4½ - 35 |
| H | Back (1) | 25 x 35 - ¼ Ply. |
| I | Shelf (1) | 1 x 10¾ - 33⅞ |
| J | Stiles (4) | ¾ x 2 - 16⅞ |
| K | Rails (4) | ¾ x 2 - 15 21/32 |
| L | Muntins (4) | ¾ x ¾ - 13⅞ |
| M | Glass Retainer (32) | ¼ x ⅜ - 244 rgh. |
| N | Door Stop (1) | ¼ x ¼ - 2 |
| O | Small Drawer Sides (4) | ½ x 2⅞ - 11½ |
| P | Small Drawer Fronts (2) | ½ x 2⅞ - 16⅜ |
| Q | Small Drawer Backs (2) | ½ x 2⅞ - 15⅞ |
| R | Drawer Bottoms (4) | 8⅜ x 15⅞ - ¼ Ply. |
| S | Large Drawer Sides (4) | ½ x 4⅞ - 11½ |
| T | Large Drawer Fronts (2) | ½ x 4⅞ - 16⅜ |
| U | Large Drawer Backs (2) | ½ x 4⅞ - 15⅞ |

- (12) #8 x 2" Fh Woodscrews
- (20) ⅜" x ⅜" - 5/16" Hardwood Plugs
- (4) ¼" Shelf Pins
- (8) 6½" x 6½" Glass (⅛"-thick)
- (4) 2" Ball-Tip Hinges
- (8) Nylon Drawer Slides
- (4) 3¾" Drawer Pulls

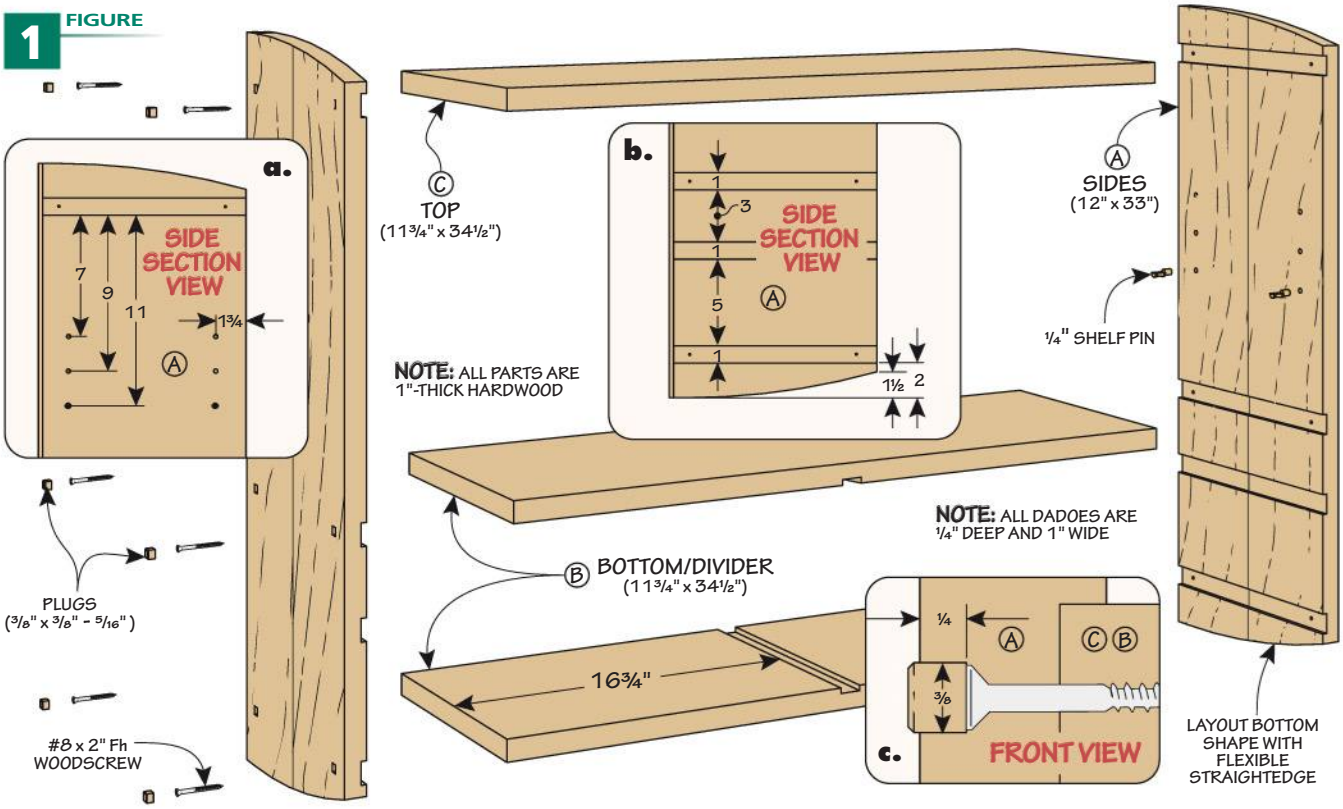


# Build a Hardwood Case

This tool cabinet project starts by building a sturdy case. As you can see in Figure 1, the main case consists of five parts. A pair of shaped sides have a series of dadoes cut in them. The dadoes capture a top, a bottom, and a horizontal divider. Later, we'll add a drawer divider as well.

**MATERIAL SELECTION.** Before we start, let's touch on material. As mentioned, we built this cabinet out of quartersawn white oak. The case parts are all a full 1"-thick. This means that you'll need to start with at least 5/4 stock, maybe even 8/4 if you can't find 5/4 material. For quartersawn stock, you may be hard pressed to find material wide enough to make the case pieces out of one piece. In that situation, glue up your material beforehand.

**Craftsman Details.** The square plugs do double-duty, hiding screws and adding an appealing detail.

The sides of the tool cabinet feature a gentle curve at the top and the bottom. We'll deal with that in a little bit — first, let's start with the joinery. Looking at Figure 1 above, you can see that each side contains four dadoes. These dadoes will capture other case parts that we'll make later.

**DADOES, YOUR WAY.** My preference for cutting dadoes is almost always a dado blade at the table saw. I like the fact that I can take the workpiece to the tool, and I feel like I get consistent results between the matching parts. However, most dado blades stop just short of being able to cut 1" in one pass. Therefore, you will either need to shim out your dado stack, or make each dado in two passes. Whichever method you choose, set the rip fence as a stop to position your part. Then, guide your workpiece through the dado blade using the miter gauge. An auxiliary fence on the miter gauge will help support the long side panels.

After a pair of dadoes are finished, reposition the rip fence to cut the next set. The middle dadoes are laid out in Figure 1b. The dado for the top and the bottom of the cabinet can be cut with the same setup. Simply flip the workpiece end-for-end. Go ahead and cut the dadoes in the bottom and divider at the same time as you're cutting the sides. Finally, bury the dado blade in an auxiliary fence and cut the shallow rabbet along the back edge of the sides. You can see this in Figure 1a.

**OTHER DETAILS.** With the dadoes all cut, let's knock out some other details on the sides. Head over to the drill press and drill a series of shelf pin holes in each side for the shelf that's added later. To create the square holes for the plugs that hide the screws, you have a few options. While at the drill press, you can pre-drill an undersized hole to remove most of the waste, then chisel the hole square.

Another option is to use a mortiser to form the holes. Whichever you choose, you'll want to create some plug stock — simply plane stock down and cross cut it to length with a handsaw. The slight

chamfers around the top can be done with a sanding block.

**BY GLUE & SCREW.** At this point, you can shape the ends of the sides. The band saw makes quick work of this, and a block plane or rasp will help smooth out the curves. Now, it's time to do some assembly. Apply glue to the dadoes and install the top, divider, and bottom. After tightening clamps, drill a pilot hole through the square plug holes and drive screws home.

## DRAWER DIVIDERS

With the case drying, it's time to turn our attention to filling out the inside of the case. Starting at the bottom, we need to add a few more dividers that create drawer openings. The horizontal divider has a dado on the top and bottom. You can create this dado the same way you made the dadoes for the sides. The upper vertical divider is simply cut to size. However, the lower divider is notched at the back. This is to fit over hanging cleats (more on those in a minute). You can cut this notch with a dado blade at the table saw or simply free-hand it at the band saw.

**HANGING CLEATS & BACK.** This cabinet, by nature of the meaty white oak, is heavy. So, we need to make sure we have a way to properly attach it to the wall when it's all finished. This comes in the form of two hanging cleats. The cleats, as can you see in Figure 2 below, are also made from white oak. They have a groove running down the center of their front faces to capture the top (or bottom). On the ends, they have a rabbet that engages the sides of the case. Finally, the back of each cleat is rabbeted. These rabbets, along with the rabbet at the back edge of the sides, will hold the plywood back.

The order of operations when cutting the joinery on the cleats isn't terribly important. For what it's worth, I would cut the groove first, then rabbet the ends before finishing with the back rabbet. Why that order? I couldn't tell you, but that's how I'd approach it.

With the cleats cut, install all of these parts into the case. Start with the horizontal divider, followed by the vertical ones. When slipping these in place, you may need the help of a mallet and a scrap block to convince them. The upper and lower cleats are glued in place, and several screws are driven from the back side into the top, bottom, and sides. Finally, cut the plywood back panel and install it with a bead of glue in the rabbets.

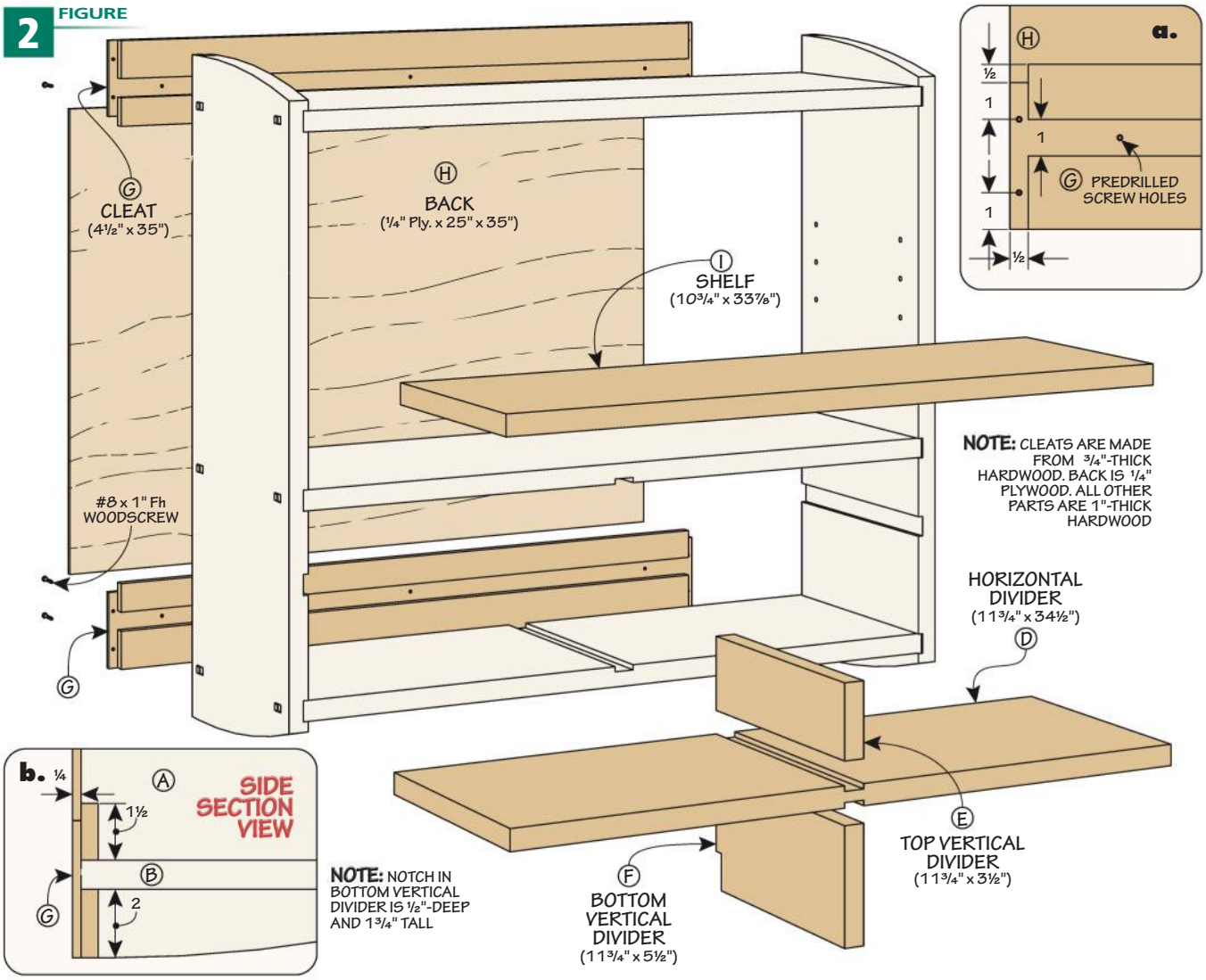

FIGURE 3

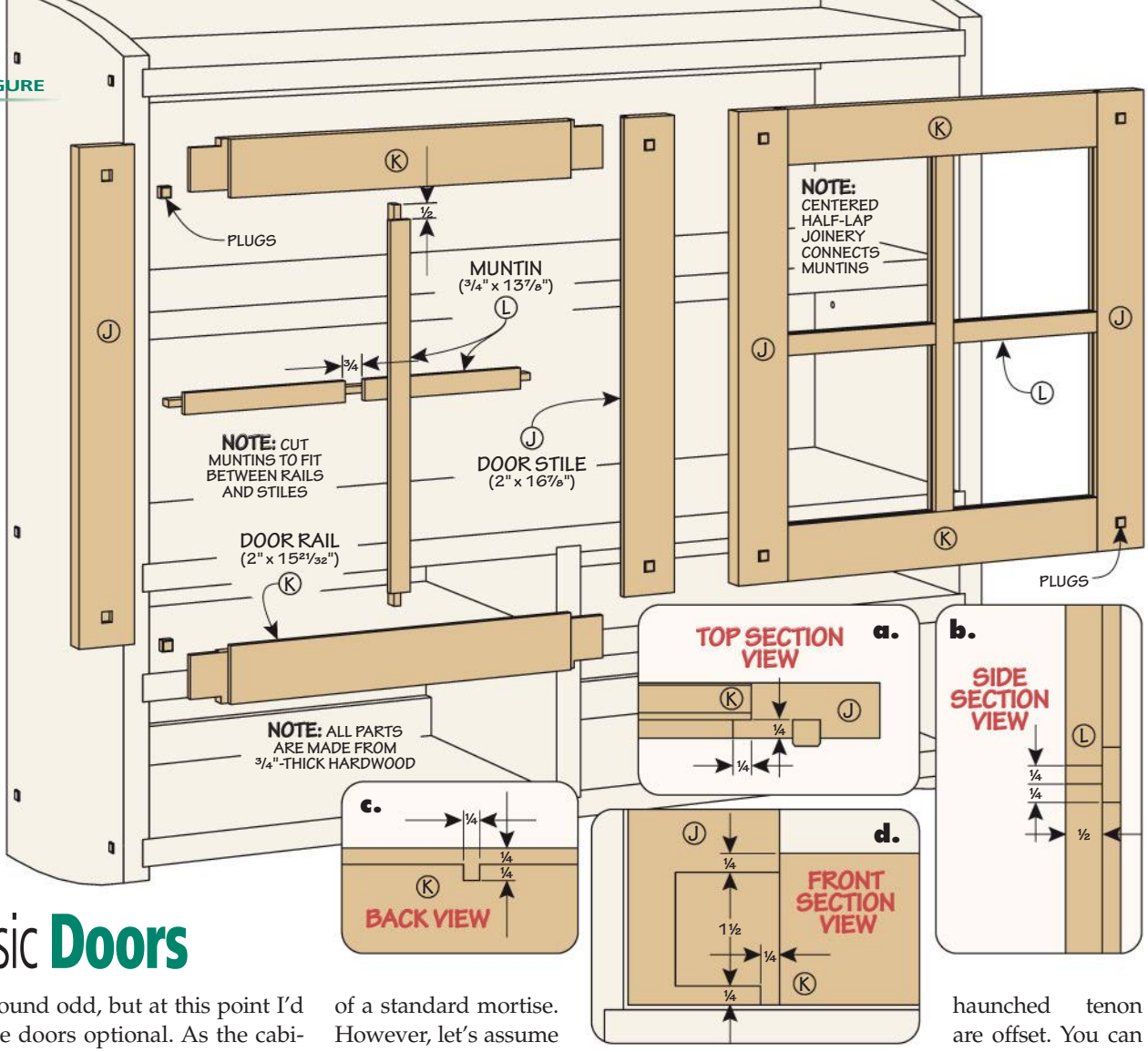


# Classic **Doors**

It may sound odd, but at this point I'd call these doors optional. As the cabinet sits, it would make a beautiful shelf without the doors. However, if you want to build a pair of doors to match the cabinet, you've come to the right place. As you can see in Figure 3 above, these doors have muntins dividing up four pieces of glass. The decorative plugs on the doors match those on the case.

**HAUNCHED MORTISE & TENON.** As simple as the construction of the cabinet case is, these doors throw a curve ball. Well, a little-league curve ball at least. The doors are constructed using haunched mortise and tenons. Looking at the drawing above, you'll see that the tenons on the rails have a small stair-step in them. This "stair-step" matches up to a similarly stepped mortise in the stiles. As per the usual, let's create the mortise first, and then we'll size the tenon to fit.

With a mortising machine, creating the haunched mortise is straightforward. Simply create a "step" at the end of a standard mortise. However, let's assume you don't have a mortising machine. If that's the case, I would create the mortises using a router table.

We'll make this mortise in two steps. The first will create a shallow mortise the same depth as the step running the entire width. The second setup will be to create the deeper mortise, but slightly shorter. While doing this, a stop block is key here. It will limit the length of the mortise you're making, allowing you to create the steps. See detail 'b' for the mortise info.

With the haunched mortise complete on each end of the stiles, it's time to cut a rabbet along the back edge. This will house the glass that we'll add later. Usually, I'd wait to cut this rabbet until all door parts are done, however you'll need to cut it before fitting the tenon. You'll see why in just a minute.

**OFFSET TENON.** As if the haunched tenon wasn't enough, the shoulders of the haunched tenon are offset. You can see what I mean in Figure 3a above. The front face of the tenon is longer than the back face. This offset shoulder seats into the rabbet you just cut in the stiles. See — everything's falling into place now. Before you start thinking too hard about the tenon however, form the inside edge rabbet for the glass using the same setup you just used on the stiles.

Now you can think about the tenon. Here's my suggested order of operations: using a dado blade, form the outside face of (all) the tenon first. Then, nibble away the lower edge of the tenon to form the haunch. Use your rip fence as a stop to set the position of the haunch. Now, cut the remaining face of the tenon. Remember, the shoulders are offset, so you'll end up removing less material from this inside face. When you've snuck up on the proper fit, lock in the rip fence as a stop and cut the

remaining tenons. Just test the fit often, and you'll end up with a great-looking, strong joint.

## MUNTINS

With the joinery done on the doors, the next item is to fit the muntins. These divide the door into four quadrants. The muntins fit into a notch on the inside face of the rails and stiles. Here again, a mortising machine will make quick work of this small detail. This notch is pretty easy to make at the router table however. Use a straight bit combined with the fence (to position), the miter gauge (to guide), and a stop block (to stop your cut) to form it. This will leave a rounded cut that's easy to square up with a chisel. Glue the doors together and fit decorative plugs into plug holes on the face of the doors.

Forming the muntins is fairly straightforward. With a dado blade, cut a rabbet on one edge of extra-long stock. Then, flip the stock over and form the rabbet on the other side. Don't finish your cut however — leave a square end and shut the saw off. This will prevent the piece from tipping into the blade. Then, after cutting the muntins to length, cut the rabbets on the front face of the workpiece to form the tongue that fits in the small notch in the rails and stiles. After applying finish, the glass can be installed with small retainer strips that are mitered to fit, as you see in Figure 4.

Finally, install the doors with hinges. Simple knobs and a magnetic catch will allow you to open and close the door. A glued in door stop helps keep the doors flush with the case.

**FIGURE 4**

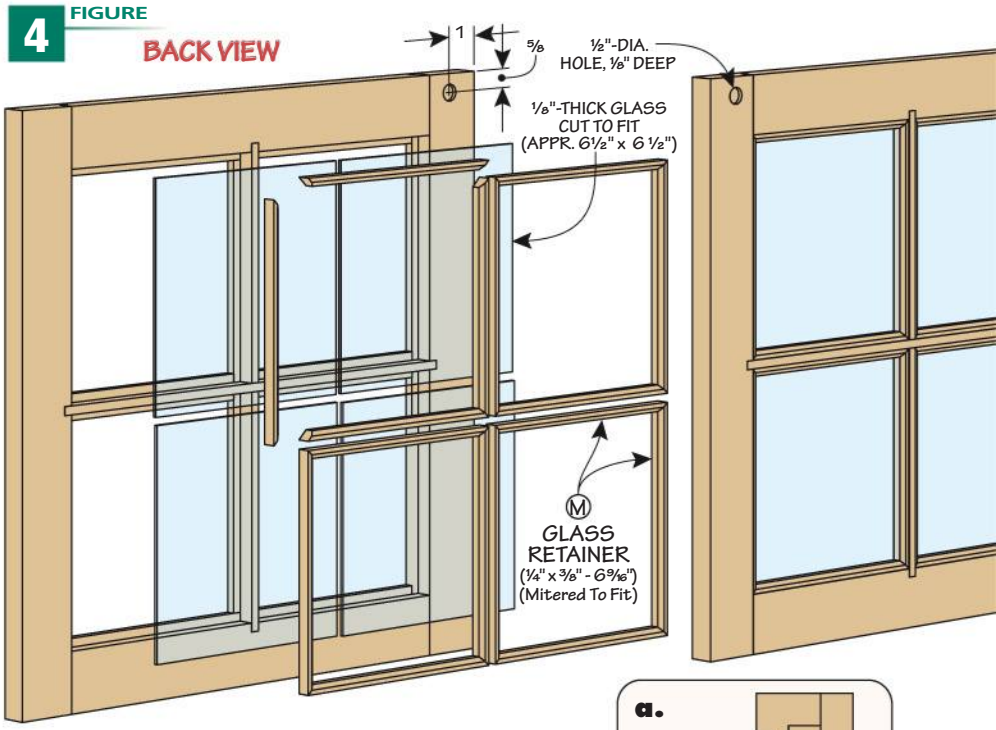


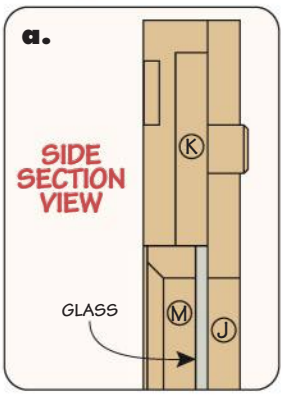


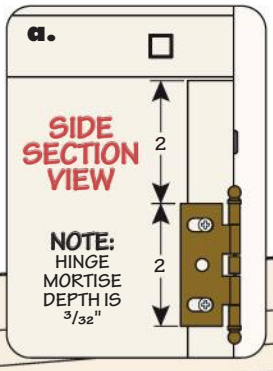


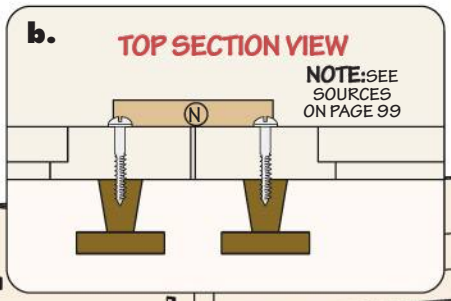


**FIGURE 5**

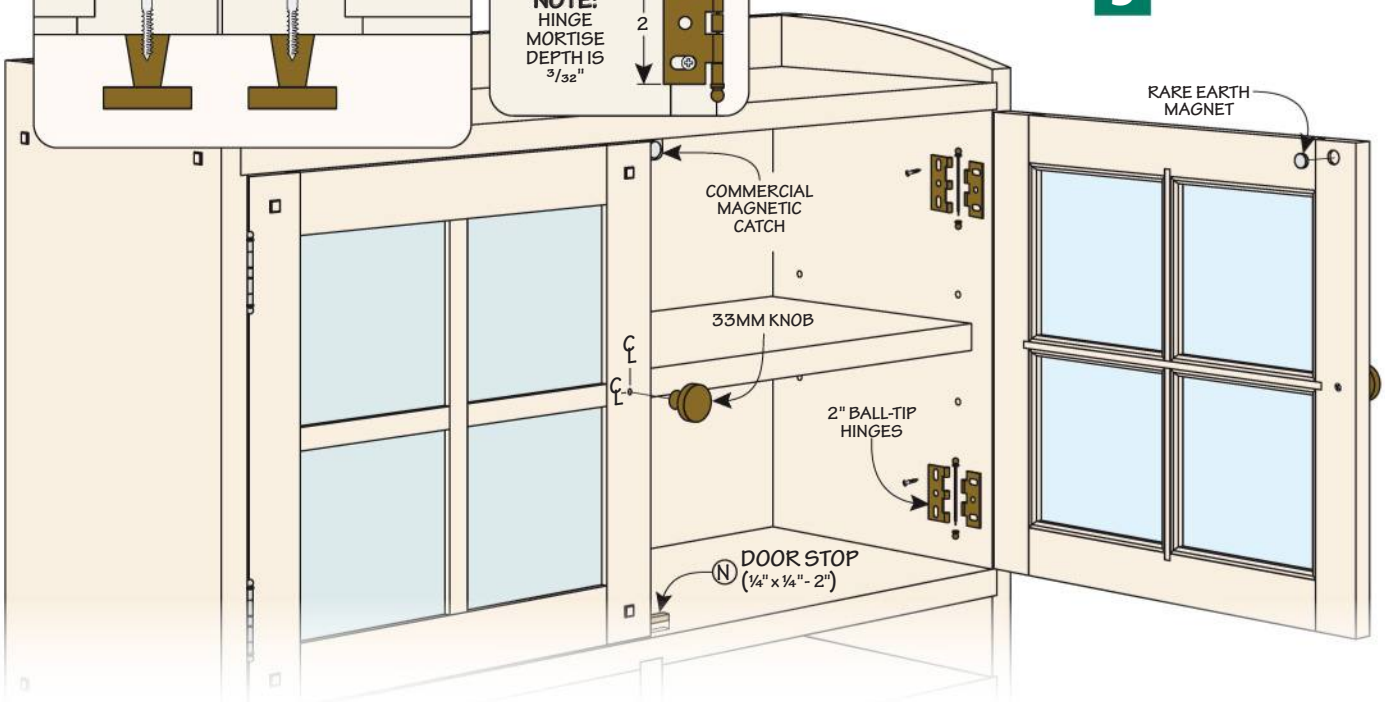

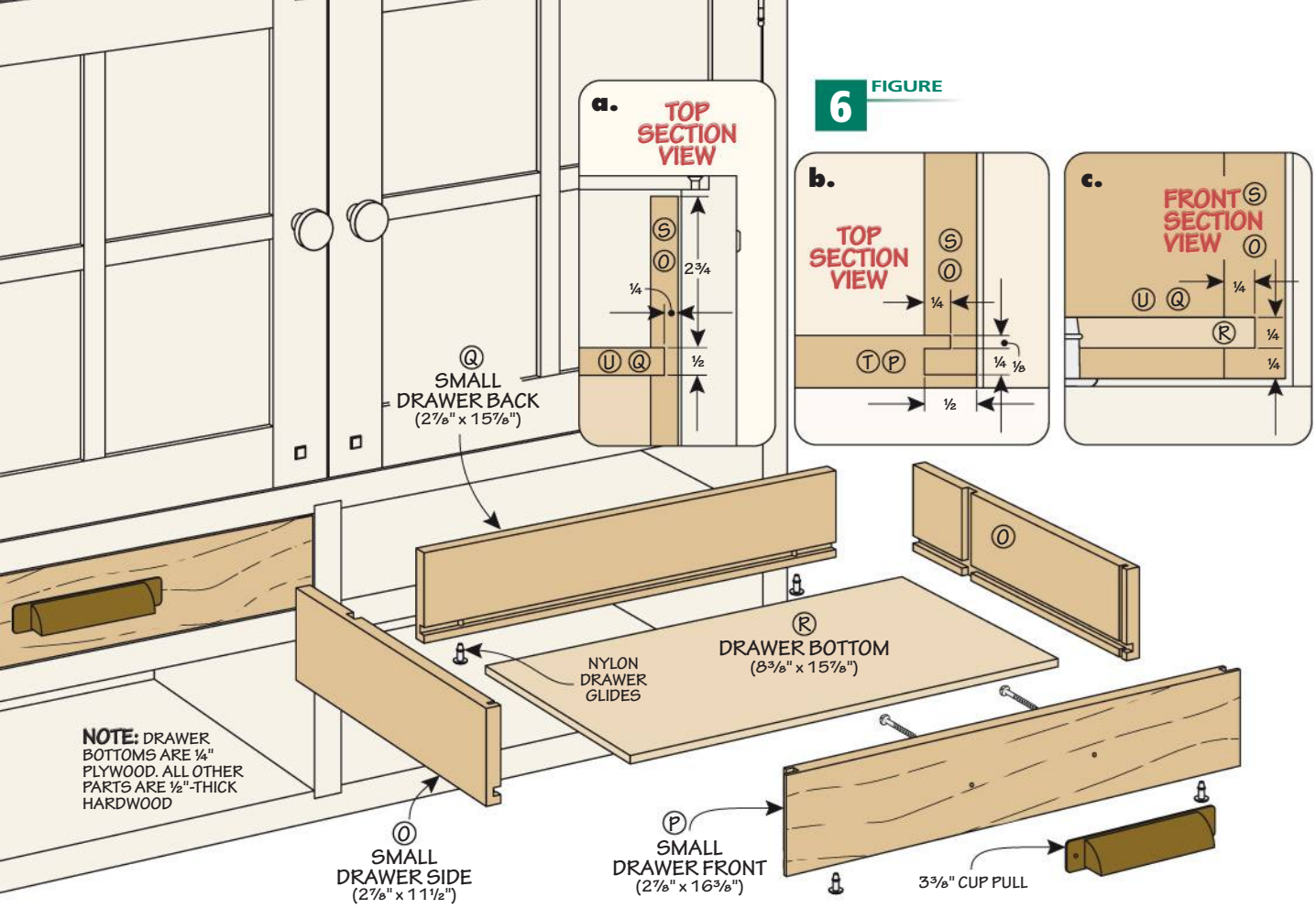


# Finish with **Drawers**

We're in the home stretch now. With the doors made, the final thing to knock out are a set of four drawers. As you can see in Figure 6 above and the photo below, there are two different sized drawers. The upper drawers are shallower than the bottom ones.

**STURDY LOCKING RABBET.** These drawers are built to take a beating. The back is held to the sides with a dado joint, as you can see in Figure 6a. Simple and strong. The front, however, is attached to the sides with a locking rabbet joint (Figure 6b). The locking rabbet provides a clean look on the front of the drawer, while providing a solid mechanical joint.

First thing's first— with this style of construction, the only parts that have the same lengths (within each drawer) are the sides. Mark your parts to keep the sides separate from the front and the back. Let's start by cutting a groove on the bottom of all the drawer parts. This will house the plywood bottom. Do this by setting up a narrow dado blade in the

**Handsome, Craftsman Hardware.** The simple iron hardware on the cabinet won't break the bank and adds to the Craftsman feel. However, you can easily add hardware of your choice to customize the look.

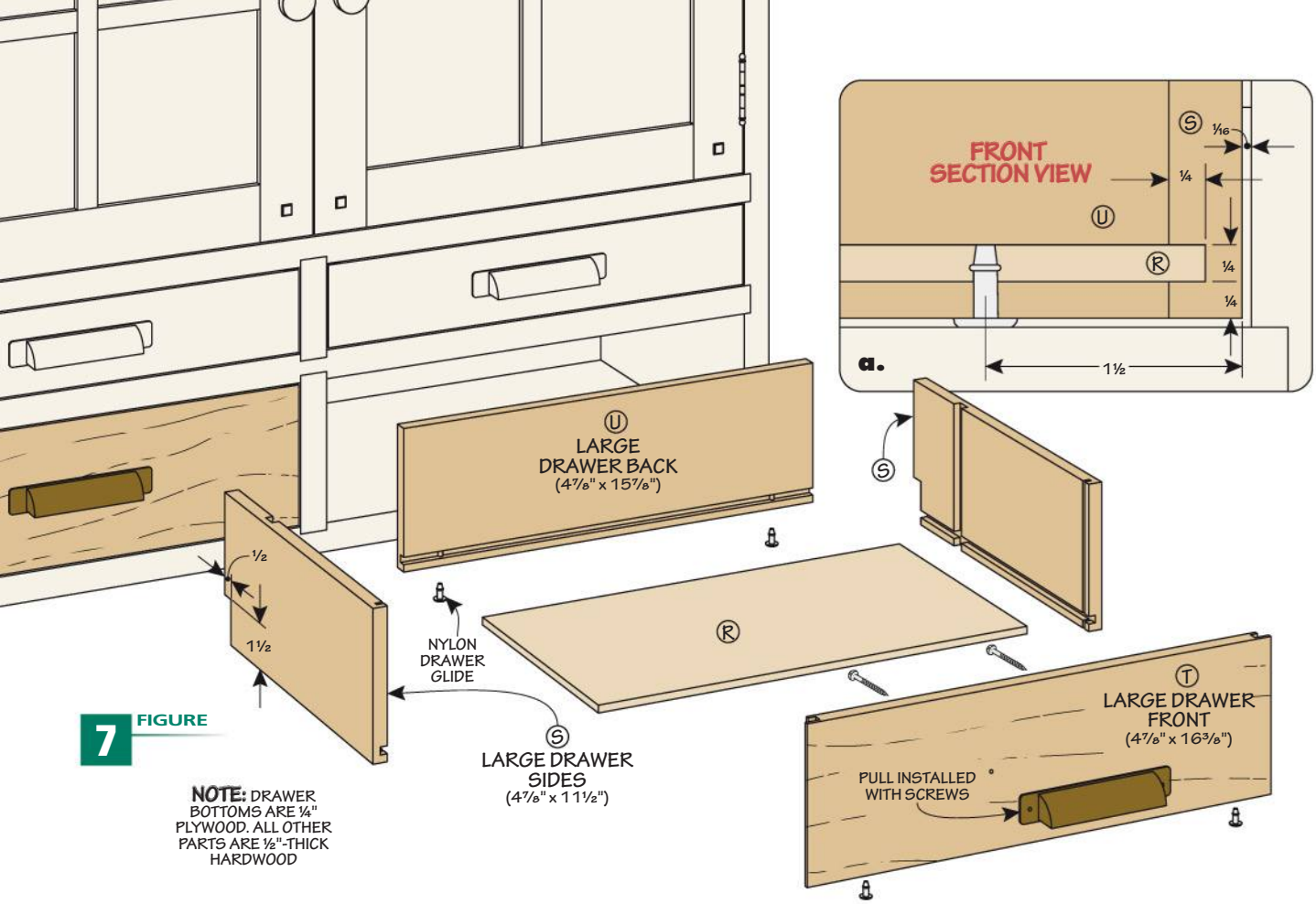


**FIGURE 7**

table saw and making the cut with the parts being guided along the rip fence.

Now, without changing your dado size, we're going to make two additional cuts. The first will be the dadoes for the drawer back. If you pay attention to Figure 6a, you'll notice that these dadoes are not at the back of the sides. Instead, the back of the drawer is a couple of inches from the back edge of the sides. This allows you to access all of the drawer contents without the drawer spilling onto the floor. The dadoes in the sides need to be made in two passes to be the proper width with this narrower dado blade, but it will go quickly.

The next cut to make will be on the drawer front. Forming the locking rabbet is a three-step cut. The first is to create a deep groove in the end of the front. This groove needs to be as deep as the sides are thick. To make this cut, stand the drawer front on end, and guide it along the rip fence with a backer block to help support it. Cutting the groove correctly will result in a thin tongue remaining on each face.

Next, lay the drawer front down on the table saw and use the dado blade to nibble the inside tongue away. You can see the shape of this joint in Figure 6b on the previous page. Finally, swap back to a standard kerf blade and cut a dado in the drawer sides. This dado accepts the remainder of the tongue you just nibbled away. If you were diligent with your machine setup, this joint will go together smoothly, with few gaps, and will be self-squaring when you apply clamps. Just a word to the wise — be careful putting this joint together before you get everything glued up. The tongues, before they're glued up, can be fragile.

The larger drawers, as seen in Figure 7, have an identical construction. The only difference with these (besides depth) is that the sides receive a notch to fit around the lower cleat.

**ASSEMBLY & HARDWARE.** With the joinery done, glue up the drawers. My favorite thing about this style of construction is that one or two clamps from side-to-side are usually enough to hold the drawers tight while the glue cures. Once the drawers are dry, it's time to take care of some hardware. The first is a set of small drawer glides. These little nylon nubs fit into holes in the bottom edge of the drawers and help them slide while leaving an even gap.

The pulls for the drawers and doors can be installed — when drilling the holes for the installation screws, I suggest using a sacrificial block on the inside as you're drilling. Newton's Law states that drilling through a finished drawer or door to install hardware will result in vampire-slaying sized splinters if you don't back up the hole.

Finally, it's time to apply a finish. With white oak, especially quartersawn white oak like this, I'm a sucker for an ammonia-fumed finish, which is traditional of Craftsman furniture. However, it's a fairly caustic finish to apply, so exercise caution if you go that route. A gel stain works well to help pop any medullary ray flecks that the stock has and is available in countless shades. Top that with a good coat of spray lacquer, and your tool cabinet is ready for years of service.

# Cabinetmaker's Saw Till

This wall-mounted case provides convenient storage for your handsaws and other treasured hand tools.

A quality hand tool is a lifetime investment. As a matter of fact, many of the saws, planes and chisels that serve me well today started their "careers" in the possession of woodworkers several generations past. One of the keys to this longevity is proper care and storage.

That's what this wall-mounted saw till is all about. The large, upper section provides a safe, convenient resting place for both your large and small handsaws. The shelf below can be used to store some of your most used hand tools or shop items you want to keep within easy reach.

But as you can see, this handy till goes a bit beyond basic practicality. It has a classic "cabinetmaker's" design that befits the traditional tools it holds.

Two design features stand out. The first is the contour of the sides that mimics the taper of a large crosscut or rip saw. As well as being decorative, this lightens the case and makes it easily accessible. Then there's my favorite detail — the unique "notch and tenon" joinery used to assemble the case sides and shelves. You'll find that making this joint is an interesting challenge for your skills and results in an extremely rigid case.

In the end, you'll have a very handy project that showcases both your craftsmanship and some of the tools you use to make it happen. I guess it's really kind of a win-win opportunity.

# Construction Details

**OVERALL DIMENSIONS:**
26½" W x 46" H x 7¾" D

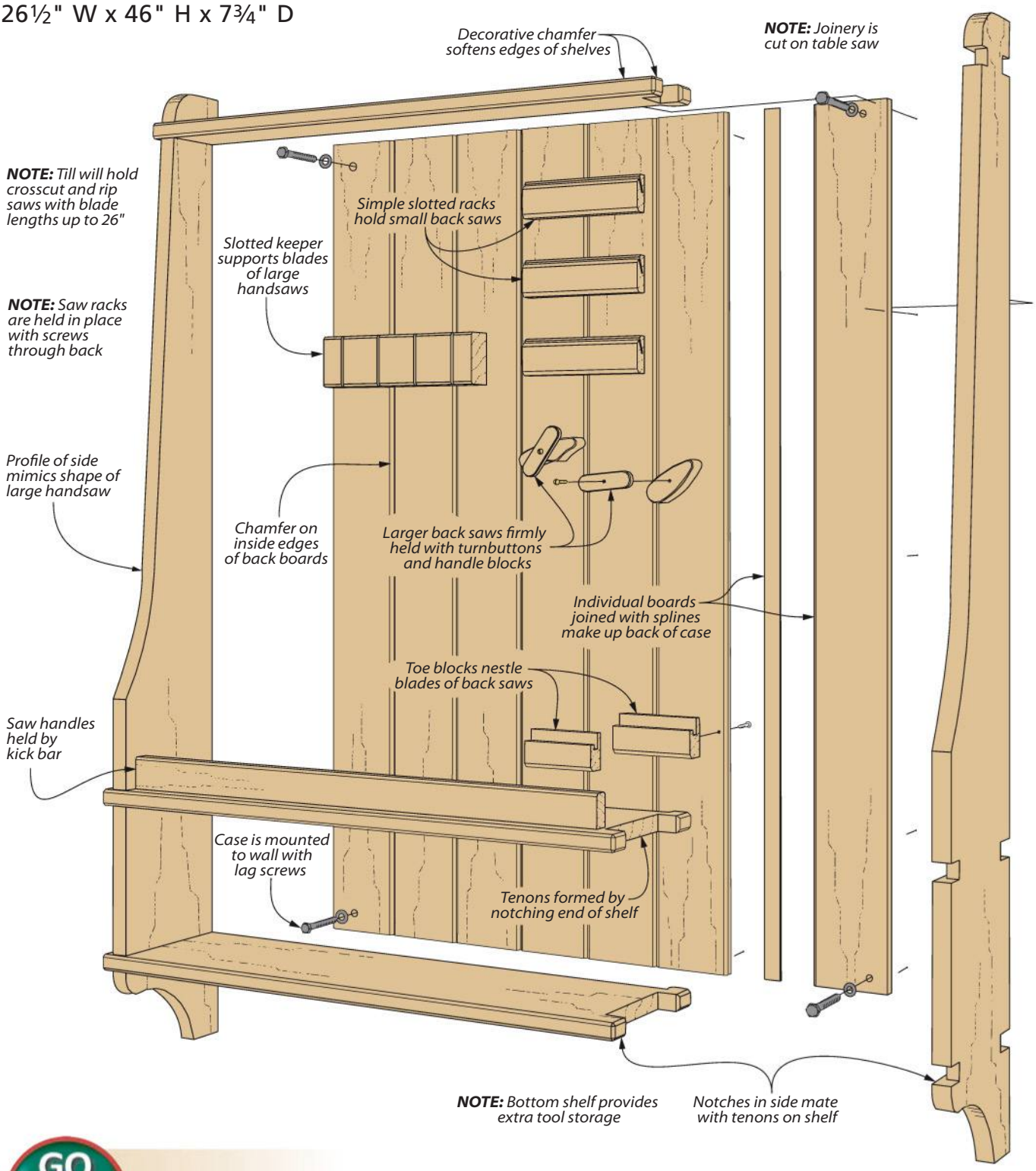


GO 2 Online Extras

To find a materials list and cutting diagram for this saw till, go to:
**Woodsmith.com/magazine/sip**

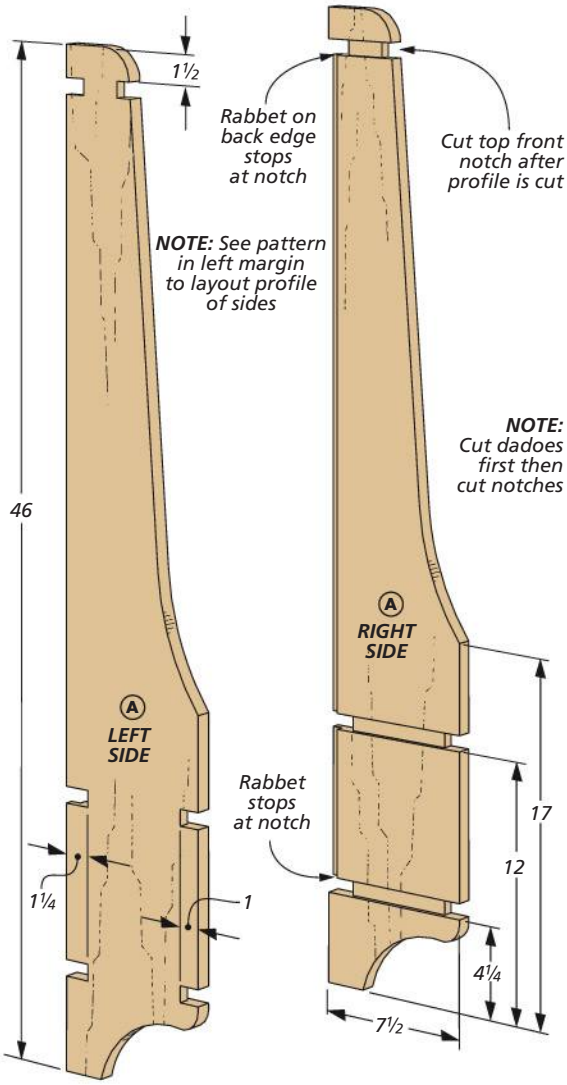


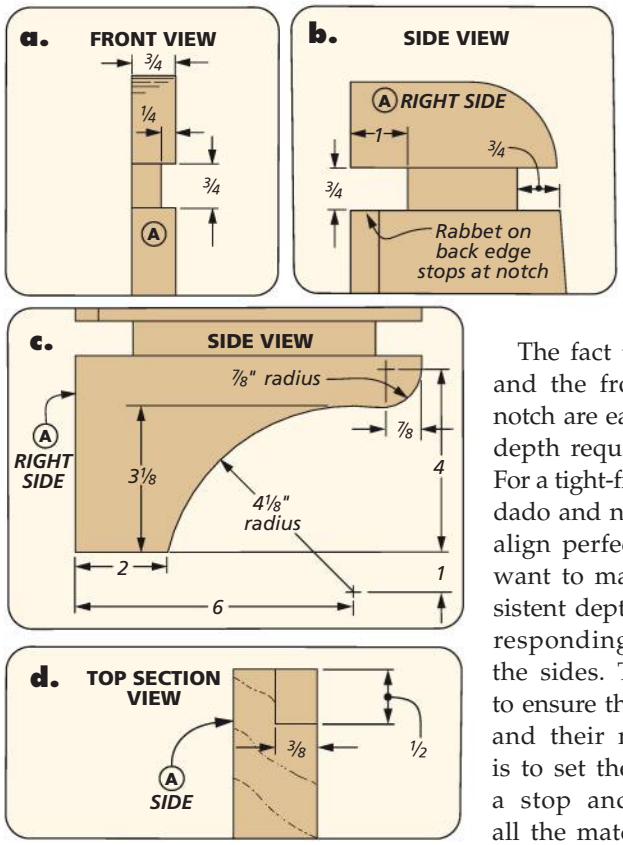


# Making the **Sides**

The saw till is constructed like a hanging wall shelf. You have two sides connected by a top, middle and bottom shelf. The middle shelf creates an upper compartment, with large saws hanging vertically and smaller saws stored horizontally. The bottom shelf can be used for additional storage — hand planes, measuring tools or hardware. The back is made from boards joined with splines.

**THE CASE SIDES.** The order of the work is pretty straightforward. I started by making the two mirror-image sides. A look at the drawings above will show you what's involved.

First comes the joinery. And here, a quick overview is helpful. Each notch and tenon joint starts with a dado cut across the side. Then a notch is cut at each end of the dado. These notches will mate with tenons on the ends of the shelves.

**DADOES & NOTCHES.** Once the two sides are cut, you can set up the table saw to cut the dadoes and the notches. All these cuts are easy to make with a dado blade. The drawings below show the setup and the sequence in which I made the cuts.

The fact that the dado and the front and back notch are each a different depth required a choice. For a tight-fitting joint, the dado and notches should align perfectly. You also want to maintain a consistent depth for the corresponding cuts along the sides. The best way to ensure that the dadoes and their notches align is to set the rip fence as a stop and then make all the matching cuts on both side pieces. This is how I approached the job.

**HEIGHT GAUGE & A SHIM.** But this also requires a lot of blade height adjustments. So to be certain the cuts were consistent in depth, I made test cuts in a piece of scrap to create a blade height gauge. This allowed me to quickly and accurately reset the blade for each new set of cuts. Furthermore, I eliminated

# **Dadoes** & Notches

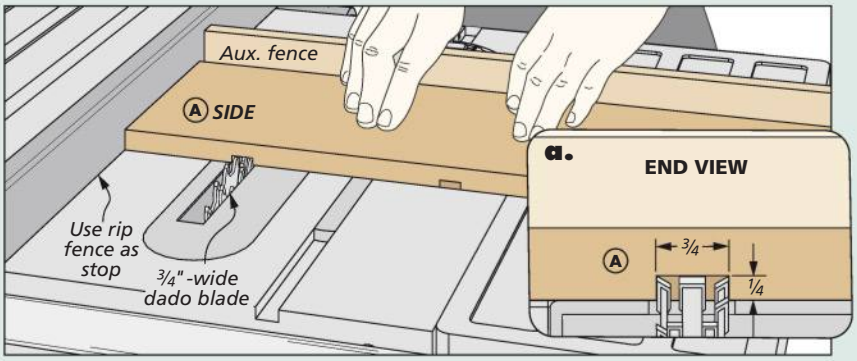


**Dado First.** To ensure perfect alignment of the dadoes and the notches that pass through them, make all the cuts with same rip fence setting. I started at the lower end and cut the dado first.

the need for one of the adjustments by making the shallow notch cuts with a ¼" spacer placed under the side, as shown in the drawing below.

**UPPER NOTCHES.** There are a couple more things to mention. Due to the taper of the sides, an 8" dado blade doesn't have the capacity to cut the top front notch. So I did this by hand after the sides were cut to shape (right drawing in the box below). And note that these notches are shallower in depth than the lower notches.

**STOPPED RABBETS.** Once the work at the table saw is completed, the next step takes you to the router table. Each side needs a stopped rabbet along its back inside edge to hold the back boards.

These rabbets run between the top notch and bottom notch. Since the notches provide ready-made starting and stopping points, routing them is easy. But I did employ a simple trick that guaranteed a smooth chip-free top shoulder — backrouting. The Shop Tip above explains the simple technique.

**SHAPING THE SIDES.** With all the joinery complete, you can now cut the sides to shape. The pattern drawing in the margin of the opposite page has all the information you need to lay out the upper and lower profiles. Both of these profiles are easy to create using a compass and a straightedge.

I cut the profiles at the band saw and then cleaned up the saw marks with a sanding drum and block plane. And with the profiles smoothed, you can finally lay out and cut the front notch at the top of each side, as shown below.

## Backrouting a Rabbet

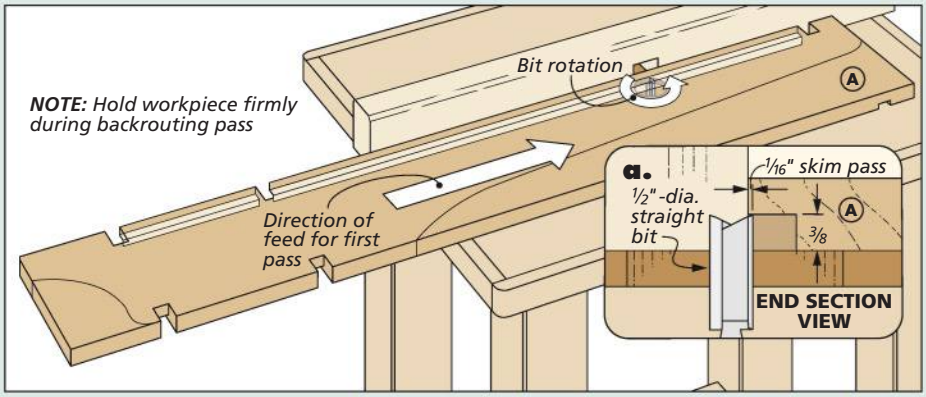


**A Skim Pass.** To backrout a rabbet on the router table, set the bit to full height and adjust the fence for a very light cut. Holding the workpiece firmly, feed it from left to right.

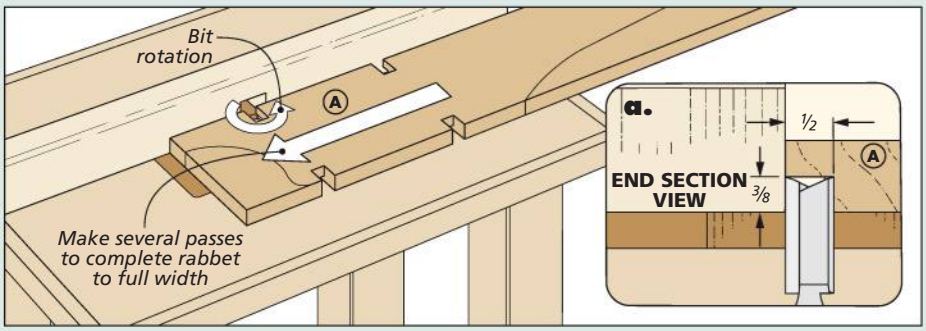


**Right to Left.** Once the top shoulder of the rabbet has been established, you can complete the rabbet with normal right-to-left passes.

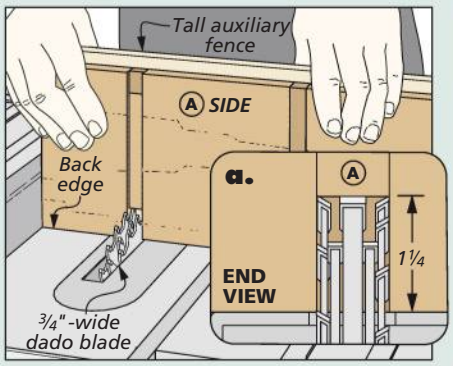


**Tall Notch.** Next, I raised the height of the blade and used a tall miter gauge fence to cut the notch at the back of the side.

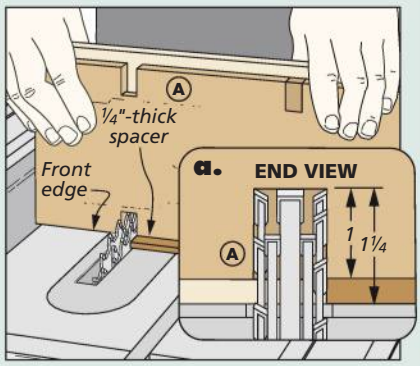


**A Spacer.** You don't have to readjust the blade to cut the front notch. Just place a ¼"-thick spacer under the side.

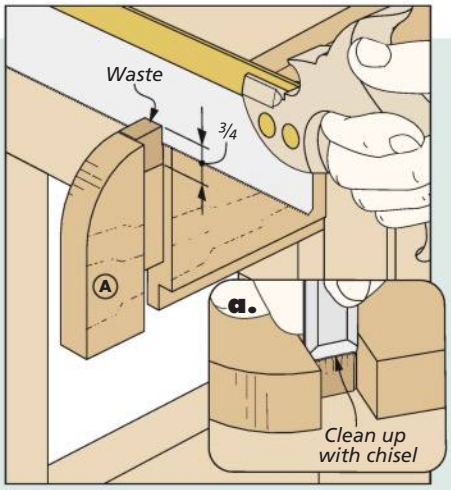


**Hand-Cut Notch.** After shaping the sides, I laid out the top front notch and used a back saw and chisels to cut it to size.

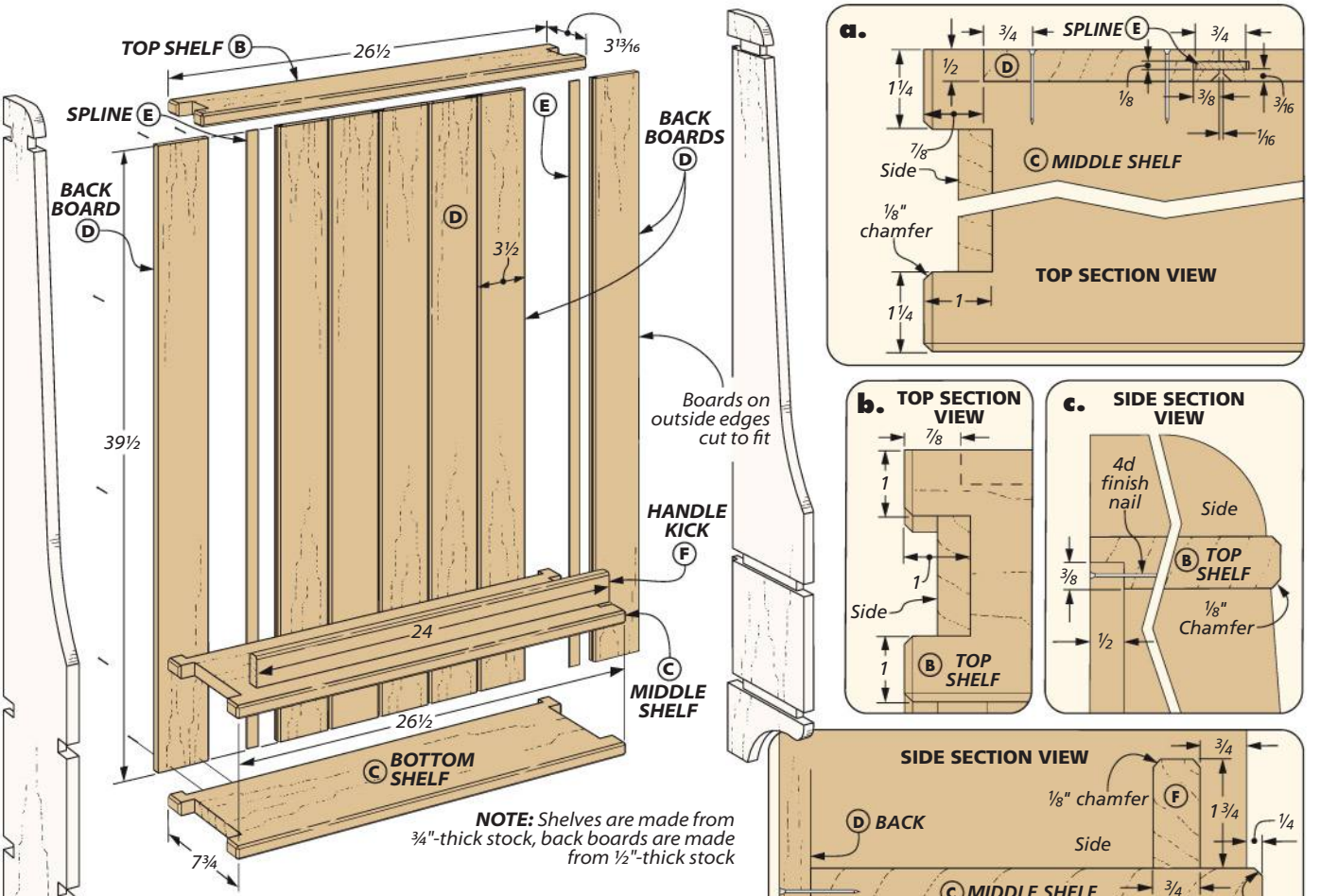


# Adding the **Shelves & Back**

At this point, a lot of the hard work is finished. Adding the three shelves and then the back is a much less involved process, and goes quickly.

**SHELVES.** I started by cutting the top, middle, and bottom shelves to their final sizes. All the shelves are sized to stand ¼" proud at the front of the case, with the tenons extending ½" beyond the sides.

**TENONS.** The next step is to form tenons on the ends of the shelves. This is done by simply cutting a large notch through the middle, leaving a tenon at each edge (details 'a' and 'b').

The technique I used to accurately size the tenons is shown in the box at left. A wide dado blade and a tall miter gauge fence are the key. The tall fence allows you to hold the shelf upright as it's passed over the dado blade.

The goal is to create a snug fit by matching the space between the tenons to the width of the notch in the sides. The fact that the tenons at the front and back of each shelf are identical in size simplifies this.

With the rip fence set as a rough stop, I started cutting in the middle and worked toward the edges. To perfect the joint, I made minor adjustments to the fence between test fits directly to

## **Tenons &** Long Notch

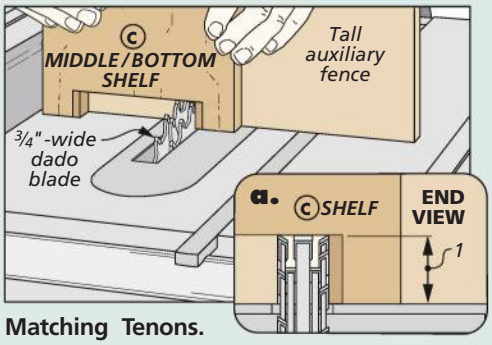


**Matching Tenons.** Set the rip fence as a stop and remove the waste with multiple cuts. Flip the workpiece side-for-side to create matching tenons.

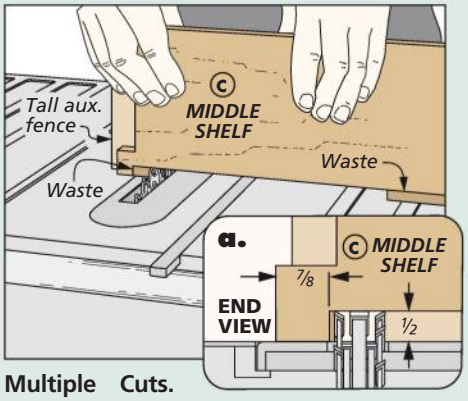


**Multiple Cuts.** The quickest way to cut the long notch in the middle shelf is to make multiple passes over a wide dado blade.

the side. The same rip fence setting can be used for the two lower shelves. You'll have to reset it for the top shelf.

**RABBETS & A NOTCH.** Once the joints are completed, the next step is to cut the joinery that will accommodate the back boards. The top and bottom shelf have a stopped rabbet that ends flush with the shoulders of the rabbets in the sides (detail 'c,' opposite). I cut these on the router table, cleaning up the corners with a chisel.

But since the back boards run behind the middle shelf, as in the drawing on the opposite page, it needs a long notch. The table saw technique I used to do this is shown in the box on the opposite page.

**CHAMFERS.** Before assembling the shelves and sides, I swapped out the rabbeting bit in the router table for a chamfer bit. All the shelves have a 1/8" chamfer on the front edges and the ends of the tenons. It's safer to chamfer the short vertical edges of the tenons with a chisel and sanding block.

**THE BACK BOARDS.** Once the sides and shelves are glued together, the splined back boards can be made and added. The main drawing on the opposite page and the How-To box above provide guidance.

I will mention a couple of details. The boards are sized in width to create a 1/16" gap at each joint and 1/32" along the sides. And when you cut the grooves, note that the two outside boards only need a groove on one edge. And likewise, these two edges don't need a chamfer. Finally, I made the splines by ripping strips from the edge of a board.

To install the back, I centered a small bead of glue on the ends of each board and nailed them in place. The splines simply float in the grooves (detail 'a,' opposite).

**SAW HOLDERS.** Now all that's left to do is outfit the case with holders. The left side of the case is reserved for larger handsaws. First, I made a handle kick to fit between the sides and glued it to the middle shelf, as shown in detail 'd' on the previous page. Then I screwed a slotted blade keeper to the back (detail 'c,' at right).

The right side of the till is arranged to hold large and small back saws. Three simple slotted racks positioned near the top cradle the smaller saws (detail 'a'). This leaves space below for a couple of larger saws. The large back saws hang on fitted handle blocks with turnbuttons, as in detail 'd.' And the toe of each saw rests in a grooved block below (detail 'b'). I made the toe block at the table saw (and routed a chamfer on its bottom edge), and shaped the handle block at the band saw.

Once all these details were taken care of and a finish applied, I mounted the till in a prominent place using black lag screws and washers. If you're like me, admiring your tools is almost as enjoyable as using them.

# Back Board Details

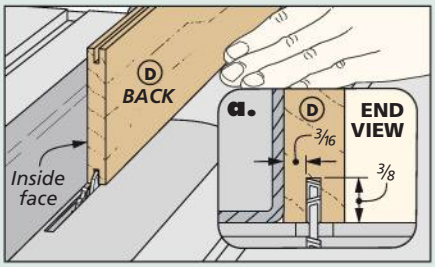


**Spline Slots.** To ensure that the spline slots in the back boards align, reference the inside face of each piece against the fence.

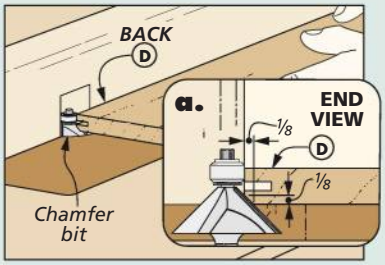


**A Simple Chamfer.** A small chamfer routed on the edges of the back boards disguises the splined joint.

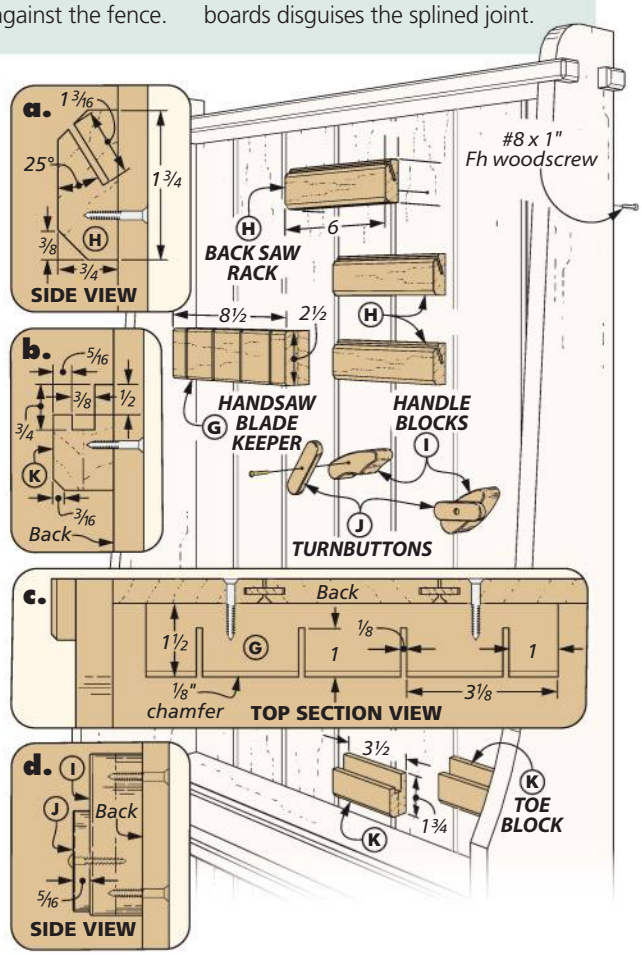


## MATERIALS & SUPPLIES

| | | |
|---|---|---|
| A | Sides (2) | 3/4 x 7 1/2 x 46 |
| B | Top Shelf (1) | 3/4 x 3 13/16 - 26 1/2 |
| C | Middle/Bottom Shelf (2) | 3/4 x 7 3/4 - 26 1/2 |
| D | Back Boards (7) | 1/2 x 3 1/2 - 39 1/2 |
| E | Splines (6) | 1/8 x 3/4 - 39 1/2 |
| F | Handle Kick (1) | 3/4 x 1 3/4 x 24 |
| G | Handsaw Blade Keeper (1) | 1 1/2 x 2 1/2 - 8 1/2 |
| H | Back Saw Racks (3) | 3/4 x 1 3/4 - 6 |
| I | Back Saw Handle Blocks (2) | 1 x 1 1/8 - 3 1/8 |
| J | Turnbuttons (2) | 5/16 x 3/4 - 2 3/4 |
| K | Back Saw Toe Blocks (2) | 1 x 1 3/4 - 3 1/2 |

- (16) #8 x 1" Fh Woodscrews
- (2) #8 x 1" Rh Brass Woodscrews
- (4) 1/4" x 2 1/2" Sq. Hd. Lag Screws w/Washers
- (46) 4d Finish Nails

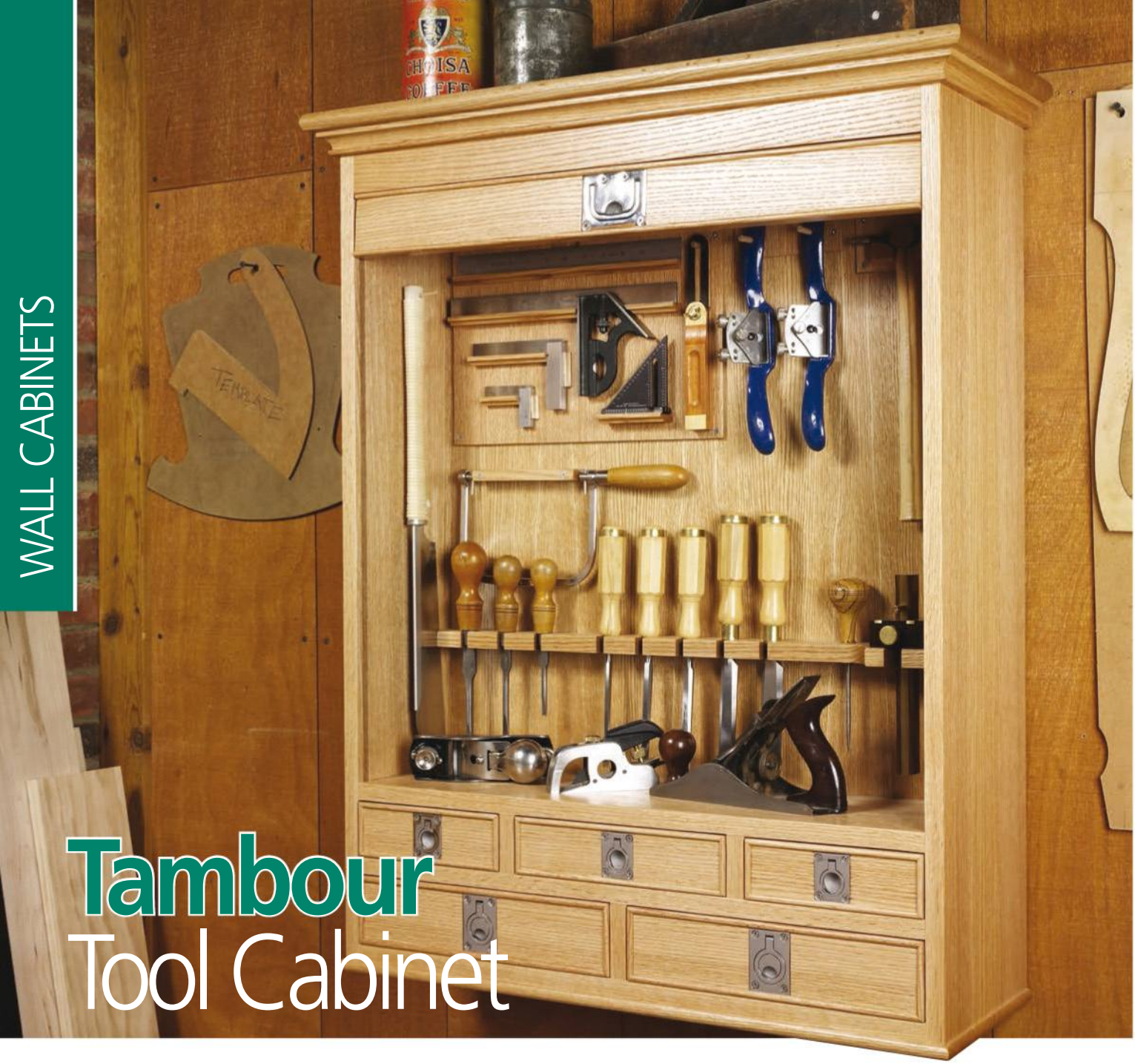

# Tambour Tool Cabinet

The combination of a traditional look, abundant storage, and unique function makes this cabinet the perfect home for your trusted tools.

Woodworkers can develop a sentimental attachment to their tools. They often become far more than just a means to an end. I own a number of hand tools whose loss would certainly trigger a period of mourning. I guess this is one reason why building a finely crafted home for these special tools, such as the tambour tool cabinet above, can be a labor of love.

The design concept here is loosely based on the much plainer tool cabinets once offered by *Stanley Tools*. But as you can clearly see on this project, we pulled out all the stops. The list of features starts with the pleasing color and subtle grain pattern of the solid, riftsawn red oak. With the simple, tasteful details and the classic hardware, the appearance has ageless craftsmanship written all over it.

However, storage is the first and foremost consideration. Here this cabinet has it all. The large upper compartment first grabs your attention. Hidden behind one of woodworking's most interesting challenges — a tambour door — you find storage for all your most prized hand tools. The five drawers below provide space for smaller items. You're guaranteed both a great building experience and years of practical use.

Case hangs solidly from keyhole hangers mortised into back

False back panel creates hiding space for tambour and surface for tool storage

Tambour travels in groove routed in side

**NOTE:** Template routing technique used to form grooves for tambour. See online

Tambour entry channel

**NOTE:** Tambour door offers space-saving way to enclose case

Simple, two-piece molding made at router table

Stem bumpers keep drawers sliding smoothly and centered in openings

**NOTE:** Visit Woodsmith.com /magazine/sip for details on the construction of canvas-backed tambour door

Rabbeted tambour hides track grooves

Tambour lift rail

Drawer fronts are wrapped with bead molding for classic look

Thin edging covers case joinery

**NOTE:** Rift-sawn red oak complements design of case

**NOTE:** Five graduated drawers offer versatile storage for small tools

Ring pulls mortised flush with drawer fronts

Tongue and dado joints create rigid case

**NOTE:** See page 99 for sources of supplies

# Construction Details

**OVERALL DIMENSIONS:**

30½" W x 37¼" H x 10¼" D

**Pull-Down Door.** To protect your tools from dust and damage, the tambour door can be pulled down from its hiding place inside the case.

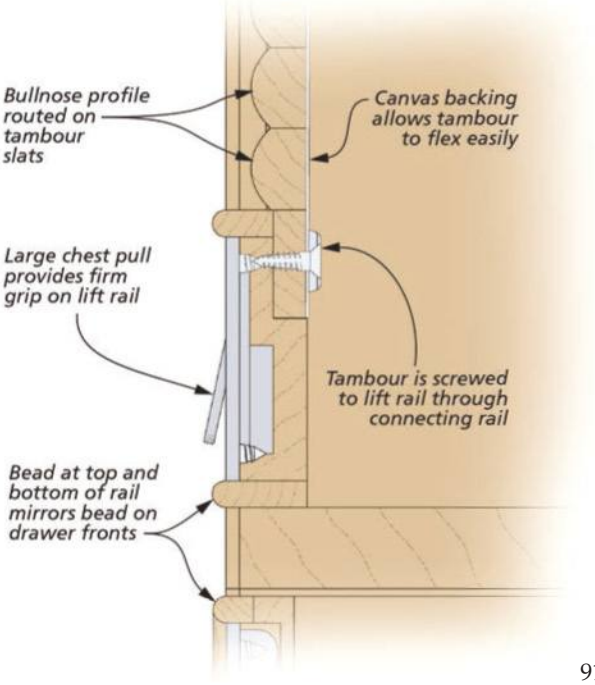

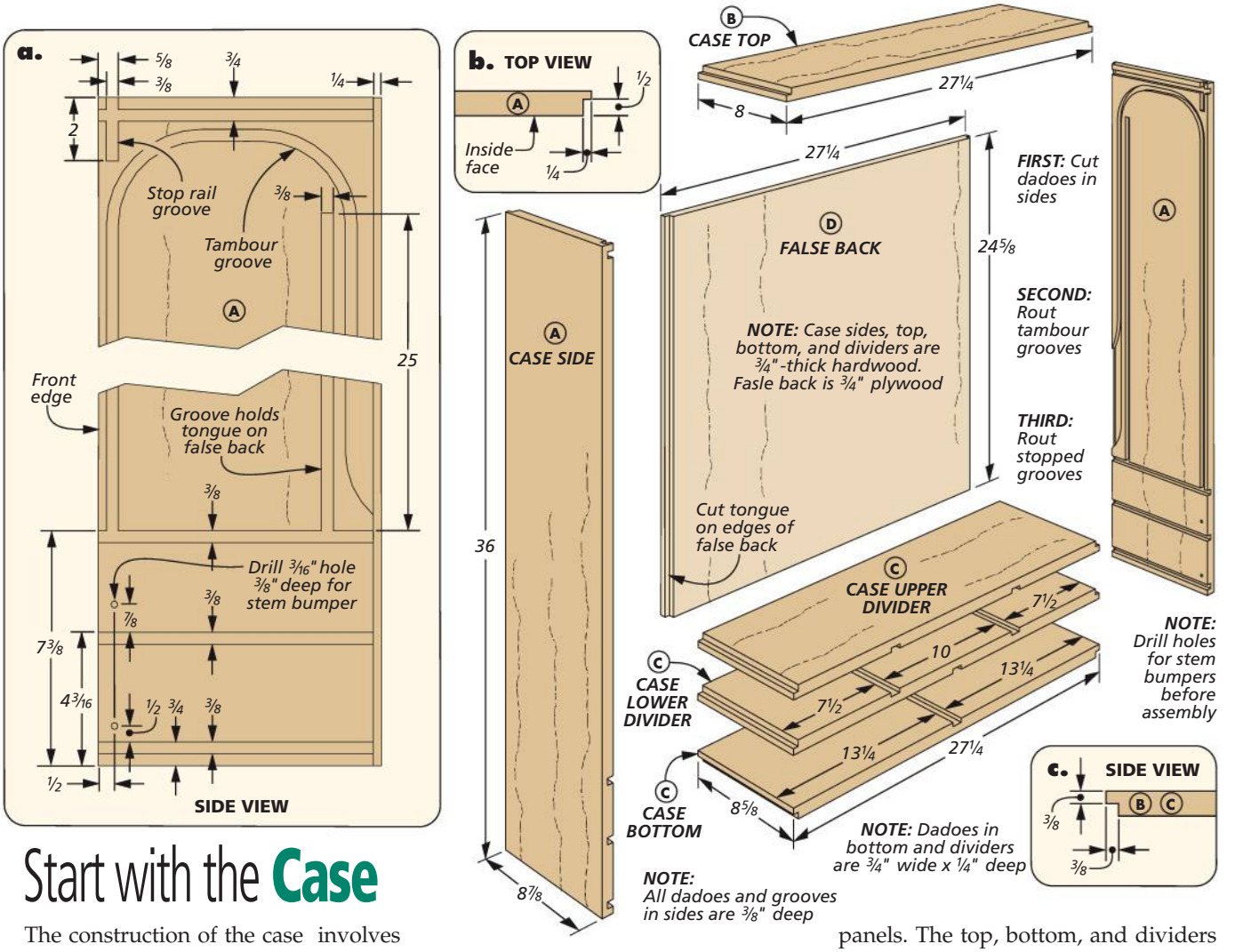


# Start with the **Case**

The construction of the case involves a good number of parts and different operations. But, with the exception of routing the curved tambour track, it's all fairly routine.

**THE SIDES.** I started by gluing up panels for the sides, top, bottom, and dividers. From there, I concentrated on the mirror image sides where the bulk of the work lies.

Detail 'a' above shows what needs to be accomplished — multiple dadoes, grooves, and rabbets criss-crossing the panels. The top, bottom, and dividers are captured in four 3/8"-wide dadoes. I made this my first task using a dado blade in the table saw. Once the dadoes were completed, I buried the blade in an auxiliary fence to cut the rabbets for the 1/4" plywood back (detail 'b').

# **Rout the** Stopped Grooves

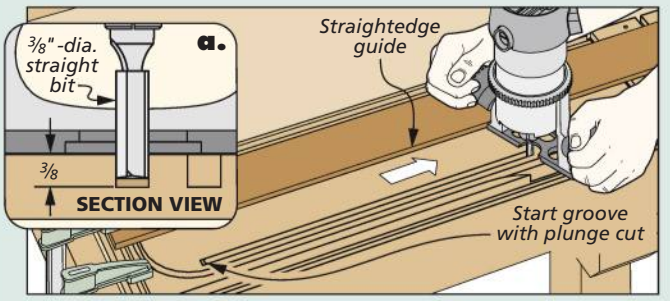


**Router & Straightedge.** I clamped a straightedge to the side to rout the stopped grooves for the false back and the stop rail. Rout the grooves in two passes moving from left to right.

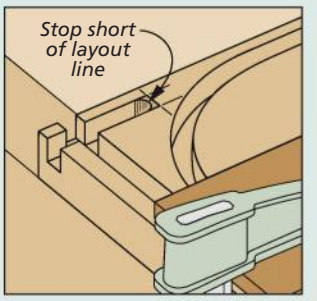


**Start & Stop.** I used the same technique to rout the short stopped grooves.

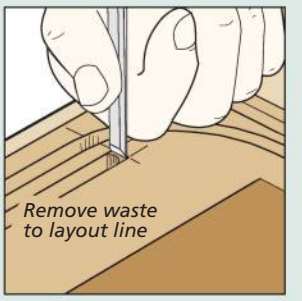


**Square Ends.** Finally, use a sharp chisel to square up the rounded ends of the cuts.

**TAMBOUR GROOVES.** Next, I routed the grooves for the tambour door. You'll find that the template routing technique explained online makes this a manageable task.

**TWO MORE GROOVES.** With the tambour grooves completed, you now have two sets of stopped grooves to rout. A short groove in the upper, front corner of each panel holds the tambour stop rail. A longer groove just inside the tambour grooves is for the ¾"-plywood false back that hides the open tambour (see the box at the bottom of the previous page).

**TOP, BOTTOM, & DIVIDERS.** After drilling a pair of stem bumper holes in each side, you can start on the top, bottom, and dividers. Once these are cut to size, there are essentially only two things to do — both at the table saw with a dado blade. First, I rabbeted the ends to form tongues to fit the dadoes in the case sides (detail 'c' on the opposite page). Next, cut dadoes in the case bottom and two dividers to hold the vertical dividers that form the drawer openings.

**FALSE BACK.** After making the false back, you can glue the completed pieces together. Like the dividers, a tongue joins this panel to the sides. Just make sure the shoulder-to-shoulder width matches the inside width of the case.

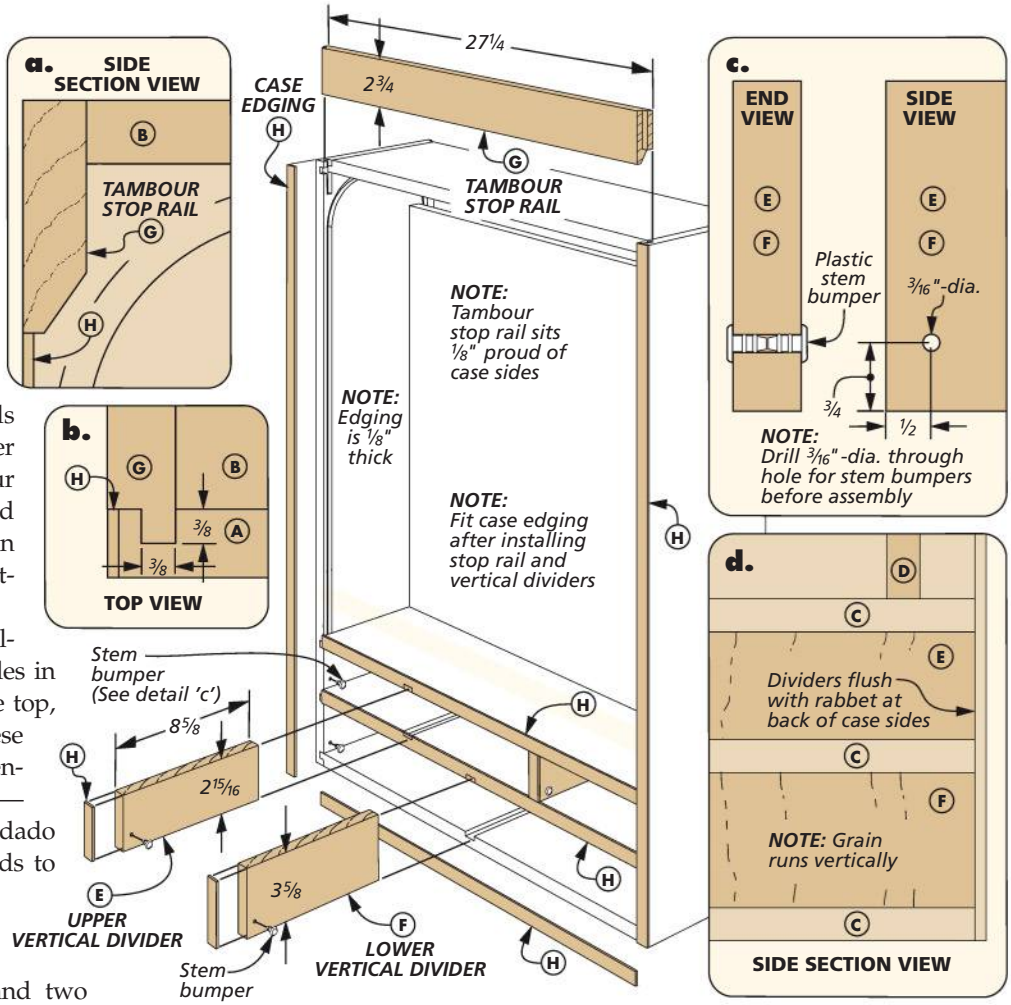


**VERTICAL DIVIDERS.** Now with the case partially assembled, you can fit the vertical dividers. When the dividers are ready, add glue to the dadoes, and then slide them into place (details 'c' and 'd').

**TAMBOUR STOP RAIL.** The stop rail comes next (details 'a' and 'b'). When the tambour is raised fully, the lift rail butts against this piece, stopping its travel. The How-To box below shows how to shape the tambour stop rail. When installed, it should sit ⅛" proud of the case sides in order to "flush out" with the case edging added next.

## Make the Tambour Stop Rail

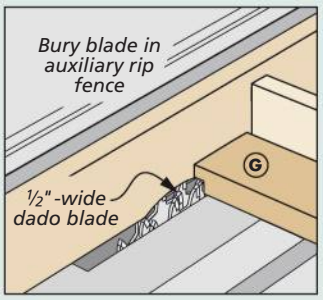


**Tongue.** Cut a rabbet across the front face of each end to form a tongue.

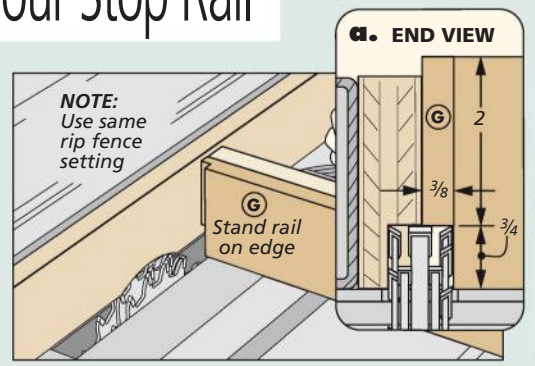


**Lower Shoulder.** Raise the blade to cut a wide shoulder on the lower edge of the stop rail. You can use the same rip fence setting.

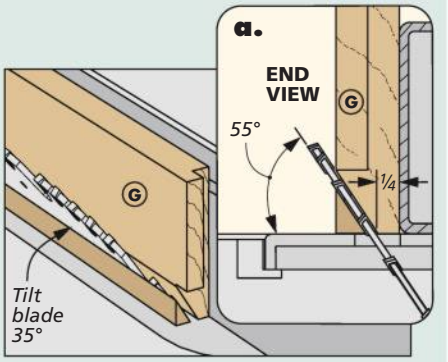


**Bevel.** The last step is to bevel the lower, inside edge of the rail to create clearance for the tambour to pass by.

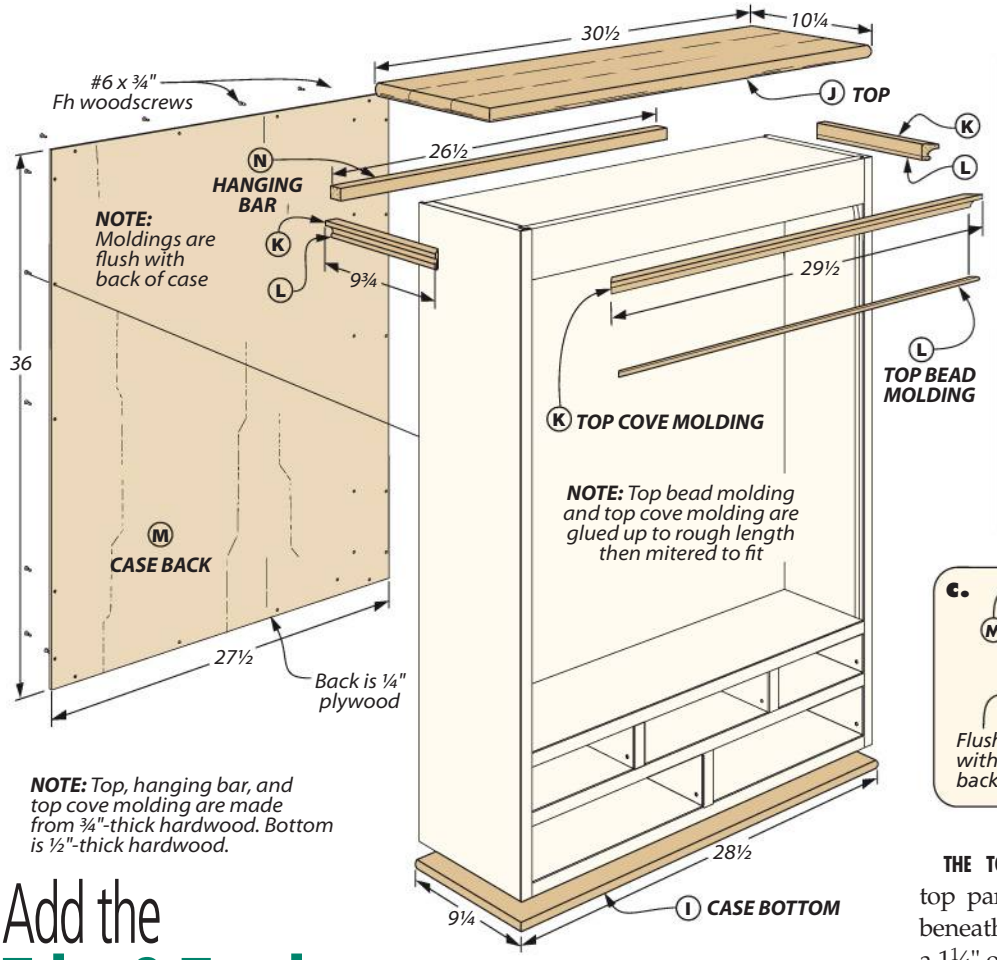


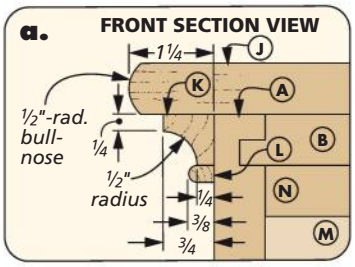


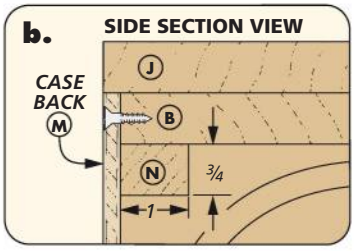


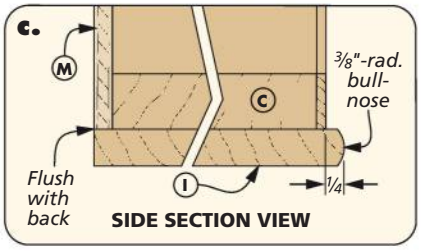


**NOTE:** *Top, hanging bar, and top cove molding are made from ¾"-thick hardwood. Bottom is ½"-thick hardwood.*

# Add the **Trim & Tambour**

Next, you have a few relatively easy chores to take care of before starting on the slightly greater challenge of building and installing the classic tambour door.

**THE TRIM.** I dressed up the plain case by adding an overhanging top and bottom and some shop-made top molding, as shown above. The bottom is a ½"-thick panel with a ⅜"-radius bullnose profile routed on three sides (detail 'c'). It's sized to fit flush at the back and overhang the case by just ¼" at the front and sides. When ready, the bottom can be glued to the case.

**THE TOP.** You'll want to install the top panel before adding the molding beneath it. The ¾"-thick top is sized for a 1¼" overhang at the front and sides. I routed a ½"-radius bullnose on the front and sides before gluing it to the case.

**COVE AND BEAD MOLDING.** The cove and bead molding wrapping the case below the top creates a "crown" effect (detail 'a'). The molding consists of separate cove and bead pieces that are glued together before being mitered to fit.

# **Adding the** Molding

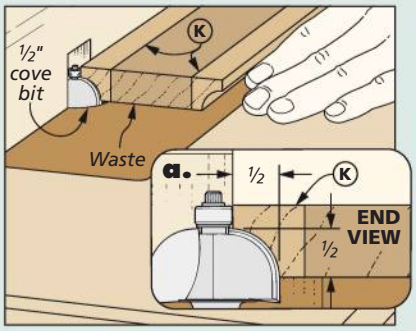


**First, the Cove.** Rout a cove profile on both edges of an extra wide blank, then rip the molding to final width.

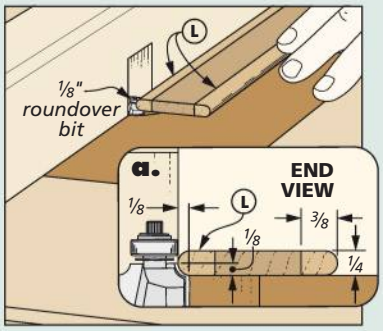


**Bead Molding.** You can make the bead molding by routing a roundover on both faces of the blank.

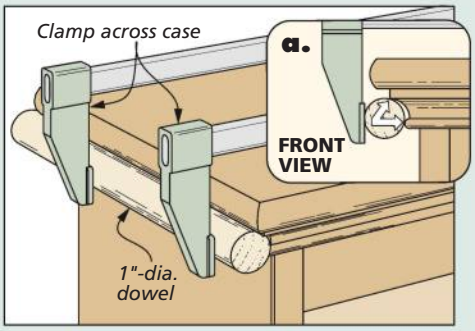


**Clamping Tip.** After mitering the molding to fit, I glued and clamped the pieces using short sections of dowel as cauls.

**CASE BACK.** In anticipation of adding the tambour and then closing up the case, I pre-fit the ¼" plywood back at this point. You'll also need to glue a hanging bar across the top of the case, as in detail 'b' on the opposite page. The back is fastened with countersunk screws so it can be removed if necessary.

## THE TAMBOUR DOOR

The concept behind a canvas-backed tambour is easy to grasp. Narrow slats are glued to a heavy piece of canvas. The canvas backing holds the slats together while allowing the whole assembly to flex as it travels around the curved track. A rigid lift rail at the bottom stiffens the tambour and provides space for a handhold.

**TAMBOUR, IN DEPTH.** I won't go into the details of shaping the slats and assembling them into a tambour door here. All the information you need to do this is covered in depth in an article you can find at *Woodsmith.com/magazine/sip*. Here, I'll concentrate on making the lift rail and installing the tambour once everything is ready.

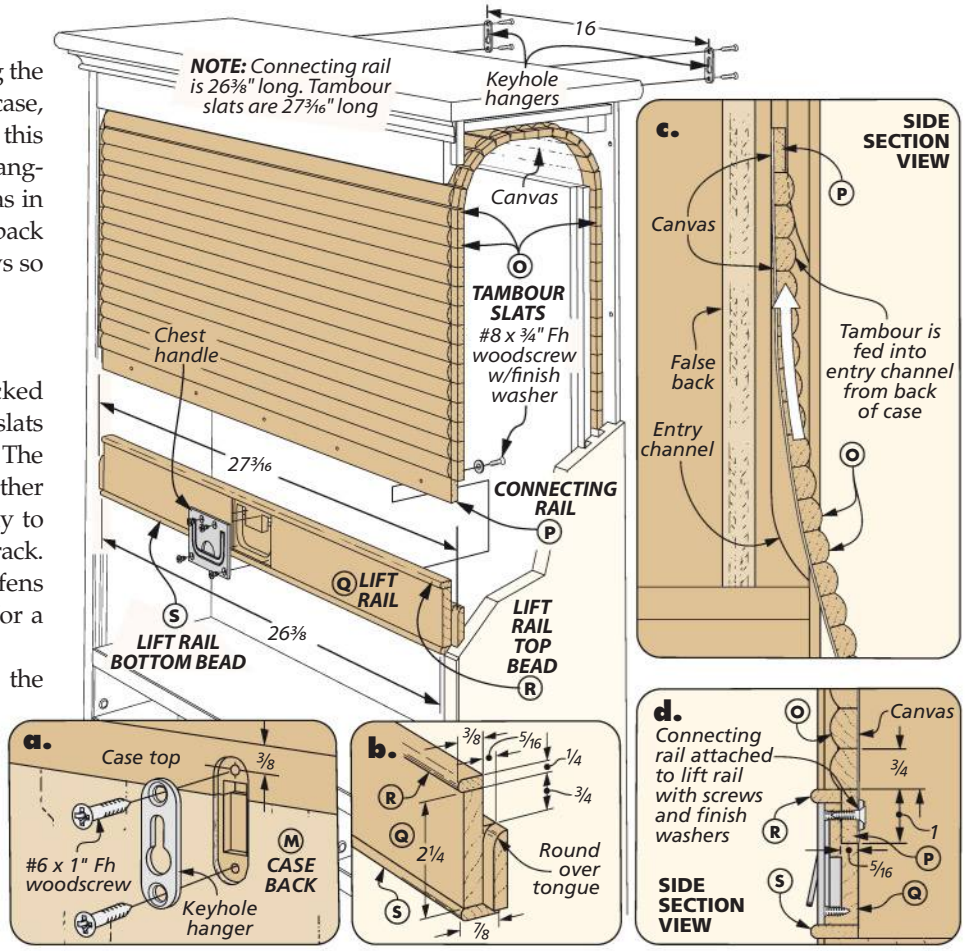


**LIFT RAIL.** The box below shows the steps to making the lift rail. First, a tongue is cut on each end to fit the tambour grooves. The lift rail will be installed in the case by angling or tipping it into the grooves at the front.

Next, I cut the mortise for the chest handle in the rail. The tambour and lift rail are fastened together through a wider connecting rail at the bottom of the tambour. The connecting rail fits into a rabbet you'll cut into the top, back edge of the lift rail.

**THE INSTALLATION.** After making and gluing the top and bottom beads to the lift rail, I preassembled the tambour. The tambour is fed into the groove through the entry channel at the rear. Tilt the lift rail into the groove at the front of the case, then snug the tambour up to the rail and re-install the screws Now you can close up the back of the case and mortise in a pair of keyhole hangers, as shown in detail 'a.'

# Make the Lift Rail

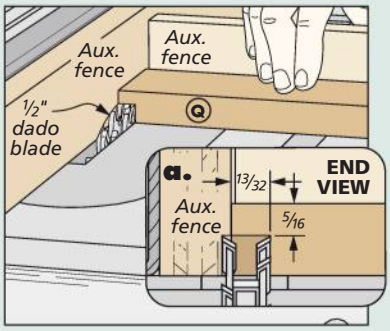


**Loose Tongue.** Once the rail is sized, cut a tongue on each end. You want a loose fit in the track groove.

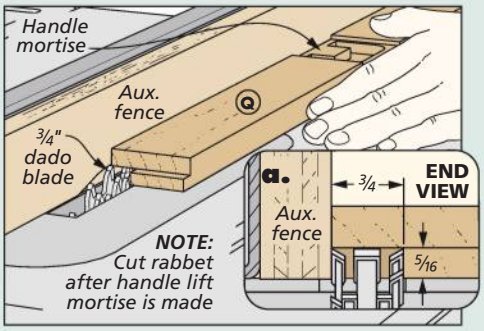


**A Rabbet.** With the mortise for the handle completed, I cut a rabbet along the top, back edge to hold the tambour connecting rail.

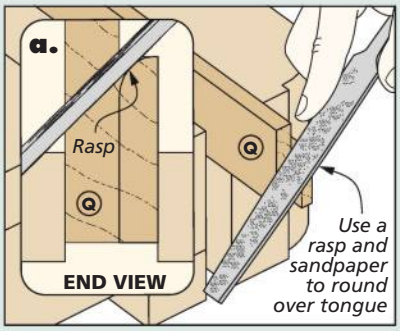


**Round the Tongue.** To avoid binding in the curve of the groove, round over the front,top edge of the tongue.

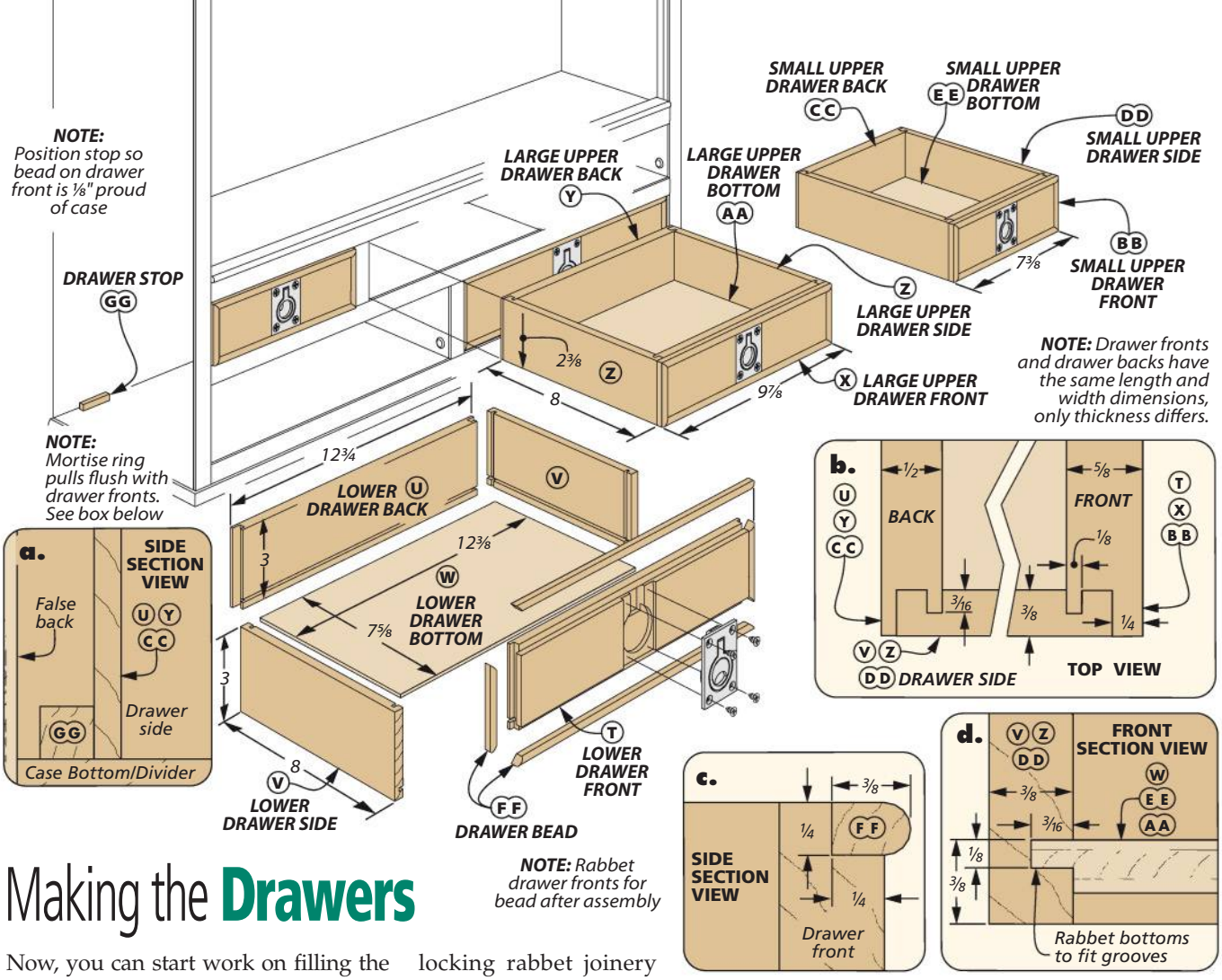


# Making the **Drawers**

Now, you can start work on filling the lower openings in the case with a set of small drawers. The drawers have a couple of eye-catching features — bead molding wrapping the fronts and flush-mounted ring pulls — that complement the overall appearance of the case. These details, as well as the locking rabbet joinery used on the drawers, provide a modest challenge, but nothing too difficult.

**THREE SIZES.** The drawers are three different sizes. And the sides, fronts, and backs are all different thicknesses. The drawer fronts are cut from 5/8"-thick stock. I allowed a 1/16" gap at each side and a 1/16" total top to bottom gap. The backs can be cut to the same size from 1/2"-thick stock. The sides came out of stock I planed down to 3/8" thick. So as you cut the parts to size, it will help

# **Install the** Ring Pulls

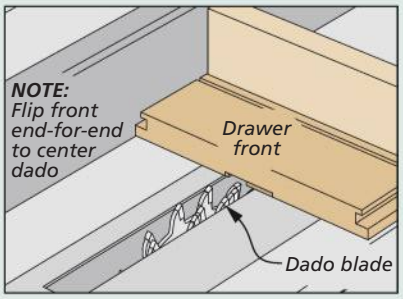


**First, a Dado.** First, cut a shallow, centered dado in the front, sized to the width and thickness of the pull plate.

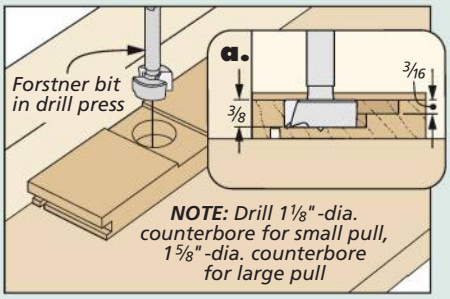


**A Counterbore.** Next, you'll need to carefully lay out and drill a counterbore to accommodate the ring cup of the pull.

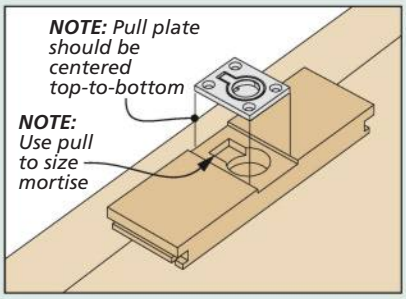


**Small Mortise.** The final step is to drill out and square up a small mortise above the counterbore for the ring hinge.

prevent confusion later on if you label them clearly.

**LOCKING RABBETS.** With all the parts ready to go, you can start setting up the table saw to cut the locking rabbet joints. Detail 'b' above shows what you're shooting for.

**GROOVES FIRST.** Cutting the joinery is a three-step operation. You'll start by cutting grooves across the ends of the fronts and backs. Even though the fronts and backs are different thicknesses, you can use the same setup to cut all the grooves. Just position the rip fence to register against the inside faces of the pieces when making the cuts with the pieces standing on end.

With the grooves completed, I trimmed back their insides faces to form a short tongue. And finally, I cut dadoes (a single kerf) in the sides to mate with the tongues on the fronts and backs.

**RABBETED BOTTOMS.** Fitting the bottoms to the drawers was the next task on my list. As usual, the first step is to cut a groove in the lower inside edge of all the pieces to capture the bottoms. I planned on using ¼" plywood for the bottoms, but I didn't want to compromise the strength of the thin sides with a ¼"-wide groove. My solution was to split the difference.

I cut ⅛"-wide grooves with a single pass across a standard saw blade. Then after cutting the bottoms to size, I rabbeted all four edges to create a ⅛"-thick tongue. You can do this with a standard blade or a dado blade.

**FIT THE PULLS.** At this point, the drawers are ready to assemble, but it's best to hold off. The ring pulls have to be let in flush with the surface of the fronts and this will be much easier to do before you glue the drawers together.

While the pulls for the upper and lower drawers are different sizes, the installation steps are the same. Each pull requires a three-part mortise. The box at the bottom of the opposite takes page takes you through the process step by step.

You'll want to have the pulls in hand before getting started. I found that they can vary slightly in their dimensions, so a custom fit may be necessary. Take care to center the pull plate top-to-bottom on the front so that the bead molding added next will fit correctly. Then once you've completed the mortises for the pulls, you can glue all the drawers together.

**ADD A BEAD.** The bead molding mitered around the drawer fronts is a nice complement to the overall appearance of the case. The pieces are simply glued into rabbets cut around the outside of the front.

The box below shows how to go about making and installing the bead. The goal is a flush fit around the outside and a gap-free fit between the pull plate and the bead, as shown in the photo above. For this reason, it works best to cut the rabbets before making the bead. This way, you can size the rabbets to "flush out" with the pull and then tweak the thickness of the bead slightly if necessary. Once the rabbets are cut and the bead is made, you can miter the pieces to length. I like to work around the perimeter, gluing and clamping each piece as it's fit.

**STOPS.** Finally, position a pair of stops in each opening so that the drawer bead stands ⅛" proud of the case (detail 'a,' opposite).

**Bead Molding.** The raised bead adds depth to the plain drawer fronts while also providing a border for the classic ring pulls.

## Fit the Bead Molding

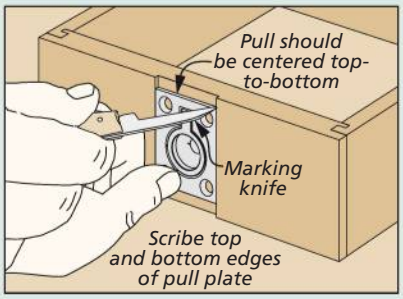


**Mark the Rabbets.** With the pull centered top-to-bottom on the front, mark for the width of the rabbets.

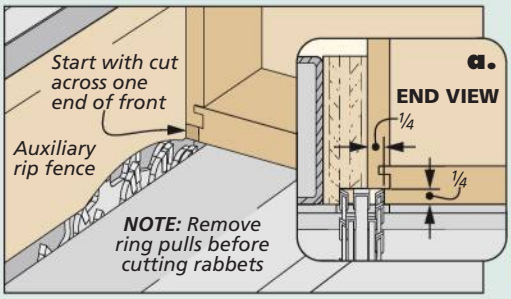


**The Cuts.** The rabbets for the bead are made with a dado blade. Cut across one end, then rotate the drawer for the next cut.

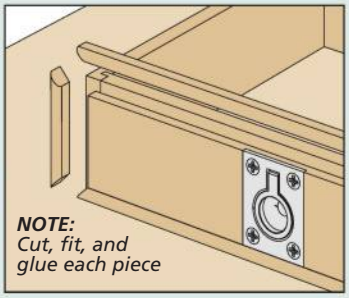


**Mitered & Glued.** I mitered one piece to fit and glued it in place before fitting the next piece.

# Custom **Tool Storage**

With the drawers in place and the finish applied, your focus can return to the original goal of the project — efficient tool storage. The photo at right shows how I utilized the upper space in the cabinet by mounting custom tool holders to the sturdy false back panel. You most likely have your own thoughts on how to organize this space, but I can offer some ideas. You'll find plans for the tool holders I added at *Woodsmith.com/magazine/sip*.

I started with a rack near the bottom to hold a set of chisels, screwdrivers, and a few other tools. The narrow rack is recessed to provide space in front for hand planes resting on the shelf. I housed all of my most used layout tools — squares, rule, bevel gauge — on a separate panel above. I made a few other tool-specific holders and then added wood dowels to hang hand tools like saws and spokeshaves.

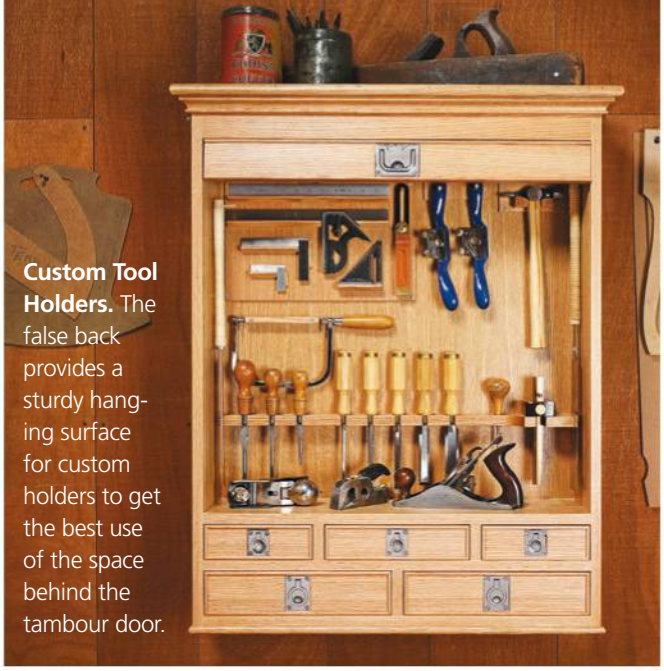

**Custom Tool Holders.** The false back provides a sturdy hanging surface for custom holders to get the best use of the space behind the tambour door.

## MATERIALS, SUPPLIES & CUTTING DIAGRAM

| | | |
|---|---|---|
| **A** | Case Sides (2) | 3/4 x 8 7/8 - 36 |
| **B** | Case Top (1) | 3/4 x 8 - 27 1/4 |
| **C** | Case Bottom/Dividers (3) | 3/4 x 8 5/8 - 27 1/4 |
| **D** | False Back (1) | 3/4 ply. x 27 1/4 - 24 5/8 |
| **E** | Upper Vert. Dividers (2) | 3/4 x 8 5/8 - 2 15/16 |
| **F** | Lower Vert. Divider (1) | 3/4 x 8 5/8 - 3 5/8 |
| **G** | Tambour Stop Rail (1) | 3/4 x 2 3/4 - 27 1/4 |
| **H** | Case Edging (1) | 3/4 x 1/8 - 180 rgh. |
| **I** | Bottom (1) | 1/2 x 9 1/4 - 28 1/2 |
| **J** | Top (1) | 3/4 x 10 1/4 - 30 1/2 |
| **K** | Top Cove Molding (1) | 3/4 x 3/4 - 54 rgh. |
| **L** | Top Bead Molding (1) | 1/4 x 3/8 - 54 rgh. |
| **M** | Case Back (1) | 1/4 ply. - 27 1/2 x 36 |
| **N** | Hanging Bar (1) | 3/4 x 1 - 26 1/2 |
| **O** | Tambour Slats (40) | 3/4 x 1/2 - 27 3/16 |
| **P** | Connecting Rail (1) | 5/16 x 1 - 26 3/8 |
| **Q** | Lift Rail (1) | 3/4 x 2 1/4 - 27 3/16 |
| **R** | Lift Rail Top Bead (1) | 1/4 x 9/16 - 26 3/8 |
| **S** | Lift Rail Bottom Bead (1) | 1/4 x 7/8 - 26 3/8 |
| **T** | Lower Drwr. Fronts (2) | 5/8 x 3 - 12 3/4 |
| **U** | Lower Drwr. Backs (2) | 1/2 x 3 - 12 3/4 |
| **V** | Lower Drwr. Sides (4) | 3/8 x 3 - 8 |
| **W** | Lower Drwr. Btms. (2) | 1/4 ply. - 7 5/8 x 12 3/8 |
| **X** | Large Upr. Drwr. Front (1) | 5/8 x 2 3/8 - 9 7/8 |
| **Y** | Large Upr. Drwr. Back (1) | 1/2 x 2 3/8 - 9 7/8 |
| **Z** | Large Upr. Drwr. Sides (2) | 3/8 x 2 3/8 - 8 |
| **AA** | Large Upr. Drwr. Btm. (1) | 1/4 ply. - 7 5/8 x 9 1/2 |
| **BB** | Small Upr. Drwr. Fronts (2) | 5/8 x 2 3/8 - 7 3/8 |
| **CC** | Small Upr. Drwr. Backs (2) | 1/2 x 2 3/8 - 7 3/8 |
| **DD** | Small Upper Drwr. Sides (4) | 3/8 x 2 3/8 - 8 |
| **EE** | Small Up.r Drwr. Btms. (2) | 1/4 ply. - 7 5/8 x 7 |
| **FF** | Drawer Bead (1) | 1/4 x 3/8 - 150 rgh. |
| **GG** | Drawer Stop (10) | 1/4 x 1/4 - 1 |

- (3) Small Ring Pulls
- (2) Large Ring Pulls
- (1) Chest Handle
- (24) #8 x 1/2" Fh Woodscrews
- (10) Plastic Stem Bumpers
- (18) #6 x 3/4" Fh Woodscrews
- (1) Artist's Canvas (30" x 36")
- (2) Keyhole Hangers
- (4) #6 x 1" Fh Woodscrews
- (5) #8 x 3/4" Fh Woodscrews
- (5) #8 Finish Washers

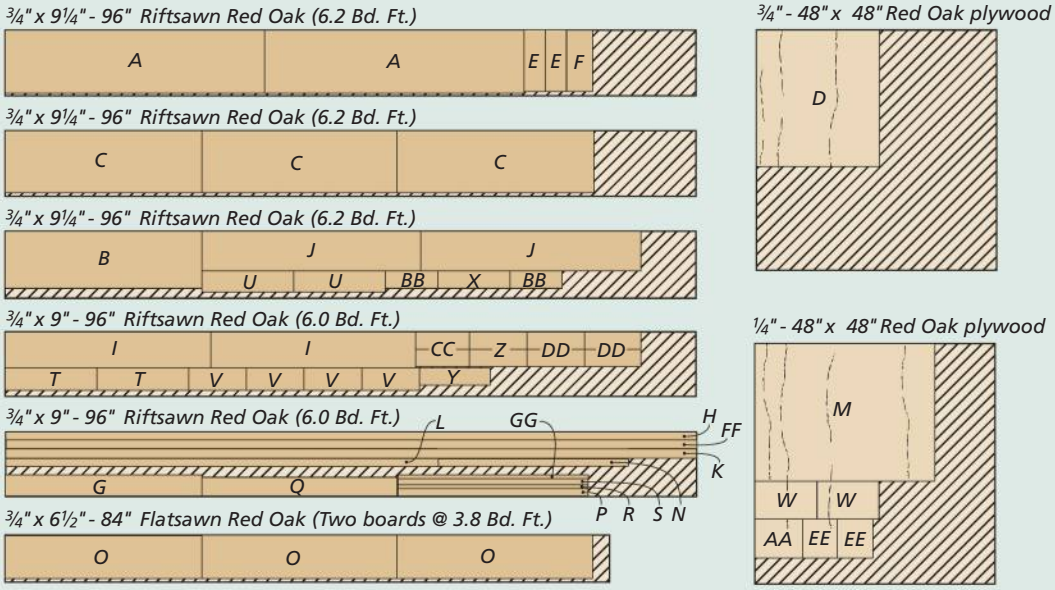


***NOTE:** All drawer parts planed to correct thickness from 3/4"-thick stock*

GO 2 Online Extras

To find plans for custom tool holders for the cabinet, visit our website at :
**Woodsmith.com/magazine/sip**

# Workshop Set Ups & Upgrades
# Project Sources

Most of the supplies you'll need for projects in this book are available at hardware stores or home centers. For specific products or hard-to-find items, take a look at the sources listed here.

## CAMPAIGN CABINET (P. 6)

- **Rockler**
  - *Stem Bumpers* . . . . . 32479
  - *No-Mortise Hinges* . . . . . 28738
  - *Chest Chains*. . . . . 30663
- **Lee Valley**
  - *Flush Pulls* . . . . . .01A4431
- **House of Brass**
  - *Chest Straps* . . . . . .C55-PB
  - *Chest Corners*. . . . . .C54-PB

The tool cabinet is stained with a 50/50 mixture of *General Finishes'* Espresso and Black Cherry waterbased finishes. It's topcoated with three coats of spray lacquer.

## CLASSIC OAK CABINET (P. 14)

- **Rockler**
  - *18" Drawer Slides* . . . . . 48022
  - *2" Butt Hinges*. . . . . 57350
  - *Brass Ball Catches* . . . . . 28613
  - *5" Swivel Casters*. . . . . 80691
- **Lee Valley**
  - *1¼" Brass Knobs*. . . . . .01A2263
  - *1" Brass Knobs*. . . . . .01A2261

## SHAKER SHOP HUTCH (P. 24)

No stain was used on the cherry cabinet, just let the wood glow and mellow in its own time. Two coats of satin lacquer provide overall protection.

- **Rockler**
  - *18" Drawer Slides* . . . . . 48022
  - *14" Drawer Slides* . . . . . 44506
  - *Magnetic Catches*. . . . . 30546
  - *2" Hinges* . . . . . 57350
  - *Shelf Pins* . . . . . GRP41612
- **Menards**
  - *1" Knobs*. . . . . 2239408

## ROUTER CABINET (P. 34)

- **McMaster-Carr**
  - *Door Pulls* . . . . . 2471N2
- **Kreg Tool**
  - *Insert Plate* . . . . . PRS3038
  - *Insert Levellers* . . . . . PRS3040
- **Rockler**
  - *Dust Port* . . . . . 28666
  - *72" Cont. Hinge* . . . . . 39170

## HIGH-TECH CHEST (P. 42)

- **McMaster-Carr**
  - *Aluminum Angle*. . . . . .88805K57
  - *Folding Pull Handle*. . . . 1647A31
  - *Rivets*. . . . . 97490A247
  - *Washers*. . . . . 90126A512
  - *Rivet Setter* . . . . . .6663A14
- **Reid Supply**
  - *Lid Supports* . . . . . HG-7752
  - *Recessed Pull Handles*. . . NSH-10
  - *Draw Latches* . . . . . NSH-2271

## TRADITIONAL CHEST (P. 50)

One thing that gives the tool chest a really authentic look is using the right hardware. If you're going to build the rabbeted-case version of the tool chest from page 55, you may want to get some wrought head nails. The 1½" nails I used can be found at *Rockler*.

- **Van Dyke's Restorers**
  - *Cabinet Hinges*. . . . . 02014884
  - *Iron Hasps*. . . . . 02004558
  - *Steel Padlock*. . . . . 02014191
- **Horton Brasses**
  - *Med. Lifter Handles* . . . . . HF-46
  - *Small Lifter Handles* . . . . . HF-45
- **Rockler**
  - *Wrought Head Nails* . . . . . 32379

## HEIRLOOM CHEST (P. 60)

- **Rockler**
  - *Stem Bumper Glides* . . . . . 32479
  - *Chest Handles*. . . . . 25841
- **Lee Valley**
  - *Butt Hinge* . . . . . 00D0203
  - *Insert Knob* . . . . . .05H3505
  - *Brown Rubber Feet* . . . . . 00S5103
  - *Left-Hand Lid Stay* . . . . . 00T0721

## PEGBOARD STORAGE (P. 70)

- **McFeely's**
  - *Storage Bins* . . . . . 86217
- **Rockler**
  - *No-Mortise Hinges* . . . . . 28704
  - *Bronze Knobs* . . . . . 1007984

## CRAFTSMAN CABINET (P. 76)

Quartersawn white oak and the Craftsman style go together like Batman and Robin. But it isn't your only material choice. The key is to select a material that doesn't have a strong or distracting grain pattern. Straight lines and muted variation are what you're looking for. Rift or quartersawn red oak, beech, butternut are other options. A coat of Tung oil brings out the warm color of the oak before applying a couple coats of spray satin lacquer.

- **Amazon**
  - *33mm Knob* . . . . . .B002HTMS70
  - *96mm Cup Pulls* . . . B0CJLGT533
  - *2" Ball-Tip Hinge* . B004JEDBSQ
  - *Magnetic Catch* . B08X3G7DWH

## TAMBOUR CABINET (P. 90)

To maintain the natural color of the wood, we didn't stain the tool cabinet. Instead, we wiped on a coat of *General Finishes'* Seal-a-Cell to give the oak a warmer color, then sprayed on a couple coats of lacquer. The tambour door requires some canvas for the backing. We purchased a piece of artist's canvas from a local art store.

- **Lee Valley**
  - *Small Ring Pulls* . . . . . 00S3021
  - *Large Ring Pulls* . . . . . 00S3022
  - *Chest Handle* . . . . . 00S3023
- **Rockler**
  - *Stem Bumpers* . . . . . 32479
  - *Keyhole Hangers* . . . . . 28837

## MAIL ORDER SOURCES

**Amazon**
**amazon.com**

**Essentra Components**
**800-847-0486**
**essentracomponents.com**

**Horton Brasses**
**860-635-4400**
**horton-brasses.com**

**House of Brass**
**houseofbrass.co.uk**

**Kreg Tool**
**800-447-8638**
**kregtool.com**

**Lee Valley**
**800-871-8158**
**leevalley.com**

**McFeely's**
**800-443-7937**
**mcfeelys.com**

**McMaster-Carr**
**630-833-0300**
**Mcmaster.com**

**Menards**
**menards.com**

**Reid Supply**
**800-253-0421**
**reidsupply.com**

**Rockler**
**rockler.com**

**Van Dyke's Restorers**
**800-558-1234**
**vandykes.com**

14

34

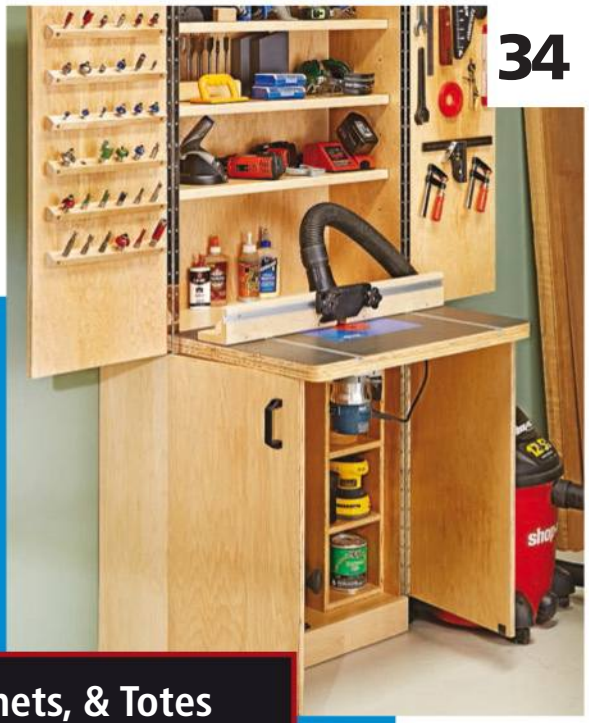

**Chests, Cabinets, & Totes for storing your special tools.**

50

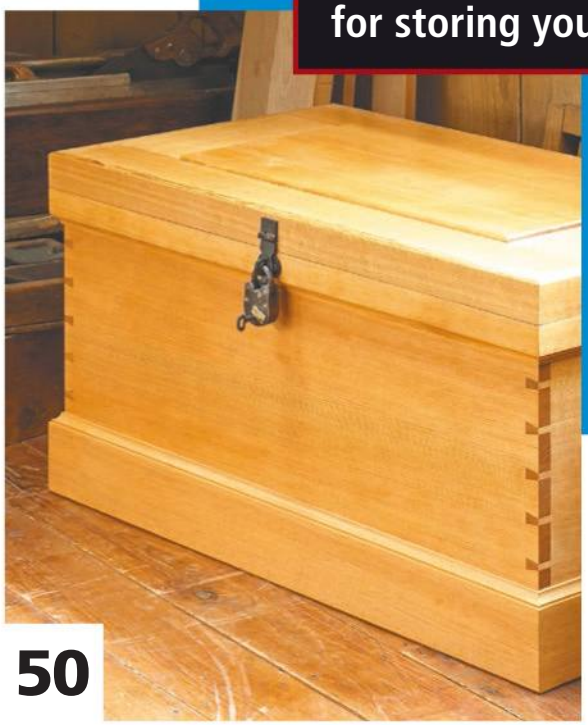

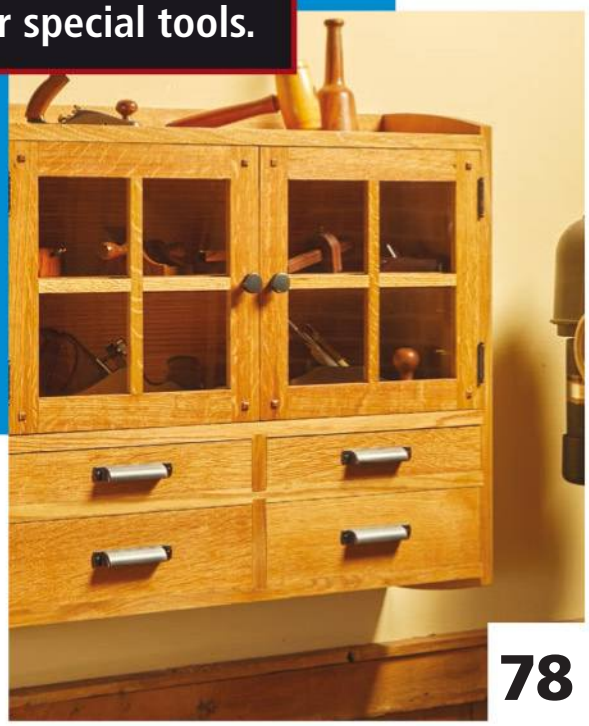

78